FORTEC
ELEKTRONIK AG

Datasheet

AUO

G101UAN01.0

UP-02-188

The information contained in this document has been carefully researched and is, to the best of our knowledge, accurate. However, we assume no liability for any product failures or damages, immediate or consequential, resulting from the use of the information provided herein. Our products are not intended for use in systems in which failures of product could result in personal injury. All trademarks mentioned herein are property of their respective owners. All specifications are subject to change without notice.

() Preliminary Specifications
(v) Final Specifications

Module	10.1 Inch Color TFT-LCD
Model Name	G101UAN01.0

Customer	**Date**	**Approved by**	**Date**
		Grace Hung	2018/10/24
Checked & Approved by		**Prepared by**	
		Jon Tseng	2018/10/24
		General Display Business Unit/ AU Optronics corporation	

AUO CONFIDENTIAL FOR Distec INTERNAL USE ONLY

Contents

1. Operating Precautions 5
2. General Description 6
2.1 Display Characteristics 6
2.2 Optical Characteristics 7
3. Functional Block Diagram 10
4. Absolute Maximum Ratings 11
4.1 Absolute Ratings of TFT LCD Module 11
4.2 Absolute Ratings of Environment 11
5. Electrical Characteristics 12
5.1 TFT LCD Module 12
5.2 Backlight Unit 17
6. Signal Characteristic 18
6.1 Pixel Format Image 18
6.2 Signal Description 19
6.3 Interface Timing 21
7. Reliability Test Criteria 22
8. Mechanical Characteristics 23
8.1 Outline Dimension (Front View) 23
8.2 Outline Dimension (Rear View) 24
9. Label and Packaging 25
9.1 Shipping Label (on the rear side of TFT-LCD display) 25
9.2 Carton/Pallet Package 25
10 Safety 26
10.1 Sharp Edge Requirements 26
10.2 Materials 26
10.3 Capacitors 26
10.4 National Test Lab Requirement 26

AUO CONFIDENTIAL FOR Distec INTERNAL USE ONLY

Record of Revision

Version and Date	Page	Old description	New Description
0.1 2017/03/24	All	First draft specification	-
0.2 2017/04/27	5	-	Power Consumption [Watt] 3.5W Weight (Max.) [Grams] 140g Physical Size (Max.) [mm] 228.02 x 148.12 x 5.35 Electrical Interface eDP1.2 Surface Treatment HC, LR
	6	-	Red x 0.543 0.593 0.643 Red y 0.291 0.341 0.391 Green x 0.292 0.342 0.392 Green y 0.539 0.589 0.639 Blue x 0.104 0.154 0.204 Blue y 0.073 0.123 0.173 White x 0.263 0.313 0.363 White y 0.279 0.329 0.379
	14	-	Symbol / Parameter / Min. / Typ. / Max. VLED / Input Voltage / 10.8 / 12 / 13.2 IVLED / Input Current / ---- / 110 / 132 PVLED / Power Consumption / ---- / 1.32 / 1.58 IF / LED Forward Current / ---- / 22 / ---- Operation Life / ---- / 20,000 / 30,000 / ----
0.3 2017/07/05	21	-	Update drawing
0.4 2017/07/28	5	Power consumption: 2.18W	Power consumption: 2.37W
	9	-	Update function block diagram
	11	Symbol / Parameter / Min. / Typ. / Max. / Units / Remark VDD / Logic/LCD Drive Voltage / 3.0 / 3.3 / 3.6 / [Volt] / IDD / VDD Current / -- / 160 / 190 / [mA] / All Black Pattern (VDD=3.3V, at 60Hz) Irush / LCD Inrush Current / -- / -- / 1500 / [mA] / Note 1 PDD / VDD Power / -- / 0.53 / 0.63 / [Watt] / All Black Pattern (VDD=3.3V, at 60Hz) VDDrp / Allowable Logic/LCD Drive Ripple Voltage / -- / -- / 100 / [mV] p-p / All Black Pattern (VDD=3.3V, at 60Hz)	Symbol / Parameter / Min. / Typ. / Max. / Units / Remark VDD / Logic/LCD Drive Voltage / 3.0 / 3.3 / 3.6 / [Volt] / IDD / VDD Current / -- / 200 / 240 / [mA] / All White Pattern (VDD=3.3V, at 60Hz) Irush / LCD Inrush Current / -- / -- / 1500 / [mA] / Note 2 PDD / VDD Power / -- / 0.66 / 0.79 / [Watt] / All White Pattern (VDD=3.3V, at 60Hz) VDDrp / Allowable Logic/LCD Drive Ripple Voltage / -- / -- / 100 / [mV] p-p / All White Pattern (VDD=3.3V, at 60Hz)
0.5 2017/10/12	5	Physical Size (Max.) : 228.02 x 148.12 x 5.35	Physical Size (Max.) : 228.22 x 148.32 x 5.35
	5	Surface Treatment : LR	Surface Treatment : HCLR
	6	White Luminance ILED= 22mA Min.340 Typ.400	White Luminance ILED= 19.6mA Min.350 Typ.410
	9	VLED 3~5V	VLED 12V
	10	-	Add Storage Humidity Add note 1
	14	LED Forward Current =22mA	LED Forward Current =19.6mA
	14	-	Add VEN & VPWM voltage
	14	Operation Life IF=22mA	Operation Life IF=19.6mA
	16	-	Modify pin name
	18	-	Modify Input Timing Diagram
	19	LED_PWM must be pull low(GND) when it is not pull high.	VPWM must be pull low(GND) when it is not pull high.
	23	--	Modify Shipping label & Carton Package
1.0 2017/12/18	6	Power Consumption : 2.37W	Power Consumption : 2.95W
	7	White Luminance min : 350、typ : 410	White Luminance min : 320、typ : 380
	14	Delete 6.5 Power ON/OFF Sequence Add 5.1.3 Power ON/OFF Sequence	Modify Power ON/OFF Sequence data
	17	IVLED : typ 110、Max 132	IVLED : typ 152、Max 180

AUO CONFIDENTIAL FOR CUSTOMER USE ONLY

<table>
<tr><td></td><td>17</td><td>PVLED：typ 1.32 Max 1.58</td><td>PVLED：typ 1.82 Max 2.16</td></tr>
<tr><td></td><td>19</td><td>-</td><td>Modify Pin Assignment</td></tr>
<tr><td></td><td>21</td><td>Delete 6.3 The Input Data Format</td><td>--</td></tr>
<tr><td></td><td>23</td><td>--</td><td>Add Detail A Drawing</td></tr>
<tr><td></td><td>24</td><td>--</td><td>Add Connect Pin 1 and more dimension</td></tr>
<tr><td>1.1 2018/09/19</td><td>7</td><td><table>
<tr><td rowspan="4">Viewing Angle</td><td>[degree]
[degree]</td><td>Horizontal (Right)
CR = 10 (Left)</td><td>80
80</td><td>85
85</td><td>---
---</td></tr>
<tr><td>[degree]
[degree]</td><td>Vertical (Upper)
CR = 10 (Lower)</td><td>80
80</td><td>85
85</td><td>---
---</td></tr>
</table></td><td><table>
<tr><td rowspan="4">Viewing Angle</td><td>[degree]
[degree]</td><td>Horizontal (Right)
CR = 10 (Left)</td><td>80
80</td><td>89
89</td><td>---
---</td></tr>
<tr><td>[degree]
[degree]</td><td>Vertical (Upper)
CR = 10 (Lower)</td><td>80
80</td><td>89
89</td><td>---
---</td></tr>
</table></td></tr>
<tr><td>1.2 2018/10/24</td><td>17</td><td>--</td><td>Add PWM Input Frequency & PWM Duty Ratio</td></tr>
</table>

AUO CONFIDENTIAL FOR Distec INTERNAL USE ONLY

1. Operating Precautions

1) Since front polarizer is easily damaged, please be cautious and not to scratch it.
2) Be sure to turn off power supply when inserting or disconnecting from input connector.
3) Wipe off water drop immediately. Long contact with water may cause discoloration or spots.
4) When the panel surface is soiled, wipe it with absorbent cotton or soft cloth.
5) Since the panel is made of glass, it may be broken or cracked if dropped or bumped on hard surface.
6) To avoid ESD (Electro Static Discharde) damage, be sure to ground yourself before handling TFT-LCD Module.
7) Do not open nor modify the module assembly.
8) Do not press the reflector sheet at the back of the module to any direction.
9) In case if a module has to be put back into the packing container slot after it was taken out from the container, do not press the center of the LED light bar edge. Instead, press at the far ends of the LED light bar edge softly. Otherwise the TFT Module may be damaged.
10) At the insertion or removal of the Signal Interface Connector, be sure not to rotate nor tilt the Interface Connector of the TFT Module.
11) TFT-LCD Module is not allowed to be twisted & bent even force is added on module in a very short time. Please design your display product well to avoid external force applying to module by end-user directly.
12) Small amount of materials having no flammability grade is used in the LCD module. The LCD module should be supplied by power complied with requirements of Limited Power Source (IEC60950 or UL1950), or be applied exemption.
13) Severe temperature condition may result in different luminance, response time and lamp ignition voltage.
14) Continuous operating TFT-LCD display under low temperature environment may accelerate lamp exhaustion and reduce luminance dramatically.
15) The data on this specification sheet is applicable when LCD module is placed in landscape position.
16) Continuous displaying fixed pattern may induce image sticking. It's recommended to use screen saver or shuffle content periodically if fixed pattern is displayed on the screen.
17) In order not to damage the touch panel, please remove the protected film as slow as possible in an environment with a humidity range from 60% to 80%

AUO CONFIDENTIAL FOR DISCLOSURE INTERNAL USE ONLY

2. General Description

G101UAN01.0 is a Color Active Matrix Liquid Crystal Display composed of a TFT LCD panel and LED backlight system. The screen format is intended to support the 16:10 WUXGA, 1920(H) x 1200(V) screen and 16.7M colors (RGB 6-bits + Hi-FRC) with LED backlight driving circuit**.** All input signals are eDP 1.2 interface compatible.

2.1 Display Characteristics

The following items are characteristics summary under 25 °C condition:

Items	**Unit**	**Specifications**
Screen Diagonal	[inch]	10.1”
Active Area	[mm]	216.81(H) x 135.5(V)
Pixels H x V		1920 x 1200
Pixel Pitch	[mm]	0.11292 X 0.11292
Pixel Arrangement		R.G.B. Vertical Stripe
Display Mode		AHVA, Normally Black
Nominal Input Voltage VDD	[Volt]	3.3 (Typical)
Power Consumption	[Watt]	2.95 (Max)
Weight (Max.)	[Grams]	140g
Physical Size (Max.)	[mm]	228.22 x 148.32 x 5.35
Electrical Interface		eDP1.2
Surface Treatment		HCLR
Support Color		16.7M colors (RGB 6-bit + Hi-FRC)
Temperature Range Operating Storage (Non-Operating)	 [°C] [°C]	 -10 to +60 (Front and rear surface) -20 to +60
RoHS Compliance		RoHS Compliance

AUO CONFIDENTIAL FOR Distec INTERNAL USE ONLY

2.2 Optical Characteristics

The optical characteristics are measured under stable conditions at 25°C (Room Temperature):

Item	Unit	Conditions	Min.	Typ.	Max.	Note
White Luminance	[cd/m2]	I_{LED}= 19.6mA (5p average)	320	380	---	
Uniformity	%	5 points	70%		---	
Contrast Ratio			600	800	---	
Response Time	[msec]	Rising + Falling	---	25	35	
Viewing Angle	[degree] [degree]	Horizontal (Right) CR = 10 (Left)	80 80	89 89	--- ---	
	[degree] [degree]	Vertical (Upper) CR = 10 (Lower)	80 80	89 89	--- ---	
Color / Chromaticity Coordinates (CIE 1931)		Red x	0.543	0.593	0.643	
		Red y	0.291	0.341	0.391	
		Green x	0.292	0.342	0.392	
		Green y	0.539	0.589	0.639	
		Blue x	0.104	0.154	0.204	
		Blue y	0.073	0.123	0.173	
		White x	0.263	0.313	0.363	
		White y	0.279	0.329	0.379	
Color Gamut	%		---	50	---	

Note 1: Measurement method

Equipment Pattern Generator, Power Supply, Digital Voltmeter, Luminance meter (SR_3 or equivalent)

Aperture Field angle 2° with 50cm measuring distance

Test Point Follow Note 2 position

Environment *< 1 lux*

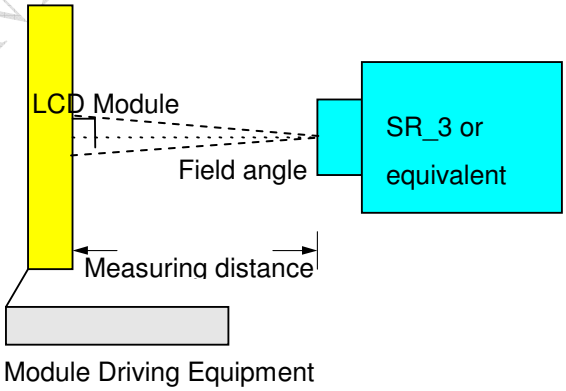

AUO CONFIDENTIAL FOR Distec INTERNAL USE ONLY

Note 2: Definition of 5 points position

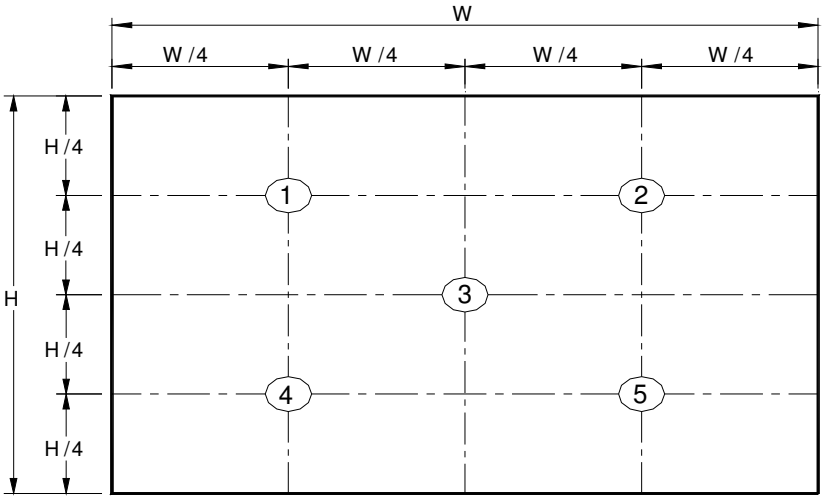

Note 3: The luminance uniformity of 5 points is defined by dividing the minimum luminance values by the maximum test point luminance

$$\delta_{W5} = \frac{\text{Minimum Brightness of five points}}{\text{Maximum Brightness of five points}}$$

Note 4: Definition of contrast ratio (CR):

$$\text{Contrast ratio (CR)} = \frac{\text{Brightness on the “White” state}}{\text{Brightness on the “Black” state}}$$

Note 5: Definition of response time:

The output signals of photo detector are measured when the input signals are changed from “White” to “Black” (falling time) and from “Black” to “White” (rising time), respectively. The response time interval is between 10% and 90% of amplitudes. Please refer to the figure as below.

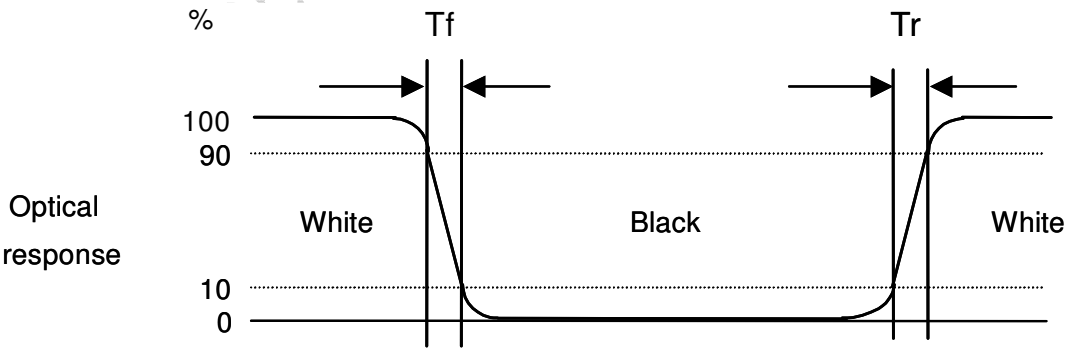

AU CONFIDENTIAL FOR Distec INTERNAL USE ONLY

Note 6: Definition of viewing angle

Viewing angle is the measurement of contrast ratio ≧10, at the screen center, over a 180° horizontal and 180° vertical range (off-normal viewing angles). The 180° viewing angle range is broken down as below: 90° (θ) horizontal left and right, and 90° (Φ) vertical high (up) and low (down). The measurement direction is typically perpendicular to the display surface with the screen rotated to its center to develop the desired measurement viewing angle.

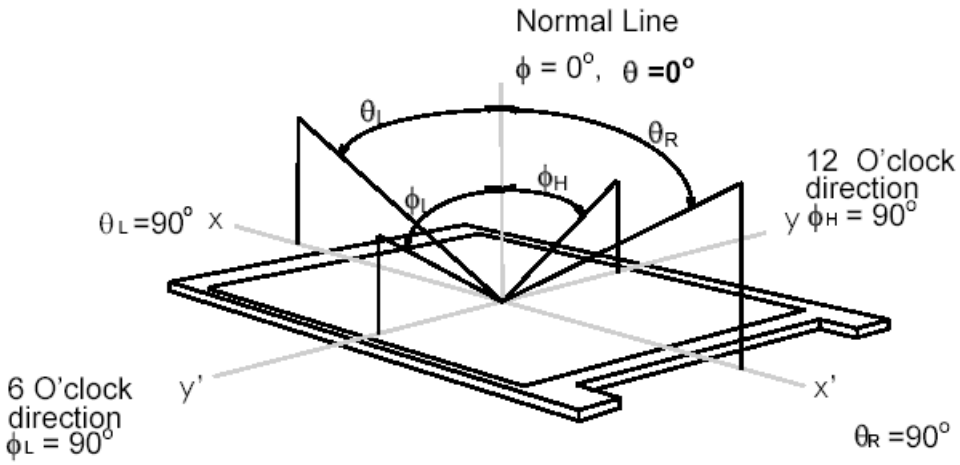

AUO CONFIDENTIAL FOR Dis ONLY

3. Functional Block Diagram

The following diagram shows the functional block of the 10.1 inch color TFT/LCD module:

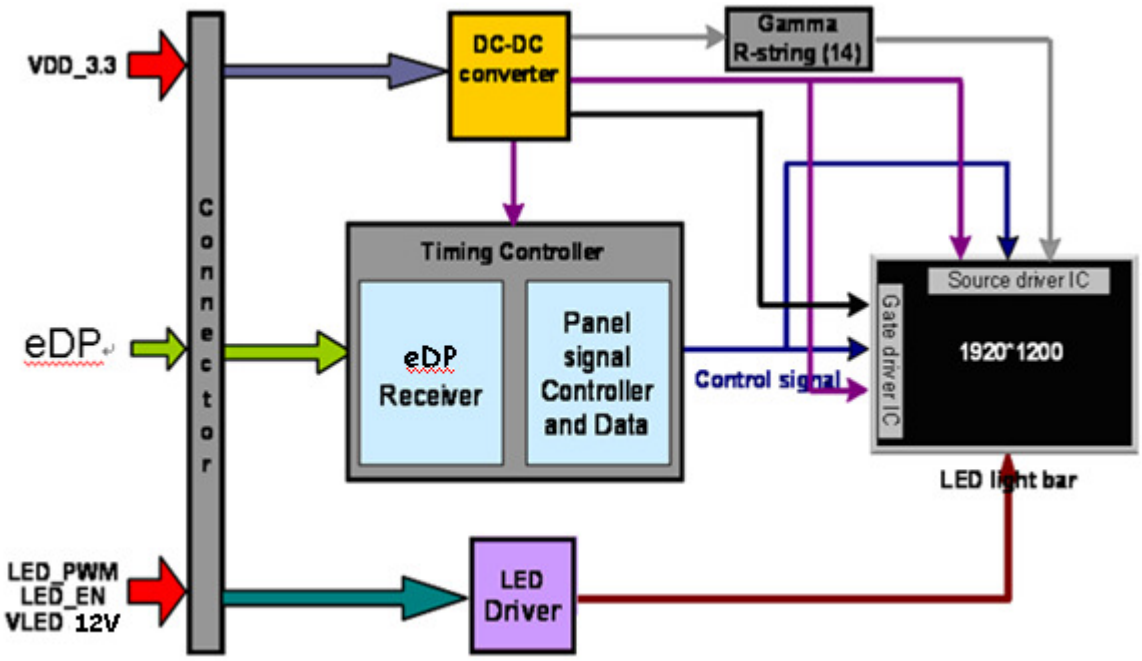

AUO CONFIDENTIAL FOR Distribution ONLY

4. Absolute Maximum Ratings

4.1 Absolute Ratings of TFT LCD Module

Item	Symbol	Min	Max	Unit
Logic/LCD drive Voltage	VDD	-0.3	+4.0	[Volt]
LCD Input Signal Voltage	V_{SIGNAL}	-0.3	VDD+0.3	[Volt]

4.2 Absolute Ratings of Environment

Item	Symbol	Min	Max	Unit
Operating Temperature	TOP	-10	+60	[°C]
Humidity	HOP	5	90	[%RH]
Storage Temperature	TST	-20	+60	[°C]
Storage Humidity	HST	5	90	[%RH]

Note 1: At Ta (25℃)

Note 2: Permanent damage to the device may occur if exceed maximum values

Note 3: Maximum wet-bulb temperature is less than 39 oC and no condensation

Note 4: Operating temperature means “Front and rear surface” of panel

AUO CONFIDENTIAL FOR Distec INTERNAL USE ONLY

5. Electrical Characteristics

5.1 TFT LCD Module

5.1.1 Power Specification

The power specification are measured under 25℃ and frame frenquency under 60Hz

Symbol	Parameter	Min	Typ	Max	Units	Remark
VDD	Logic/LCD Drive Voltage	3.0	3.3	3.6	[Volt]	
IDD	VDD Current	-	200	240	[mA]	All White Pattern (VDD=3.3V, at 60Hz)
Irush	LCD Inrush Current	-	-	1500	[mA]	Note 2
PDD	VDD Power	-	0.66	0.79	[Watt]	All White Pattern (VDD=3.3V, at 60Hz)
VDDrp	Allowable Logic/LCD Drive Ripple Voltage	-	-	100	[mV] p-p	All White Pattern (VDD=3.3V, at 60Hz)

Note 1 : Maximum Measurement Condition：White Pattern at 3.3V driving voltage. ($P_{max}=V_{3.3} \times I_{white}$)

Note 2：Measure Condition

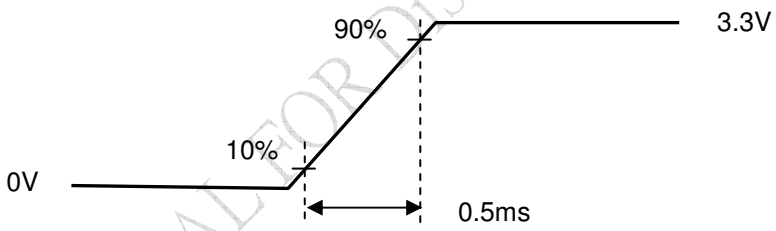

VDD rising time

AUO CONFIDENTIAL FOR Distec INTERNAL USE ONLY

5.1.2 Signal Electrical Characteristics

Signal electrical characteristics are as follows:

Display Port main link signal:

Differential pair VD+ , VD-
Which is one Display port
Main link

VCM of Display port
Main link

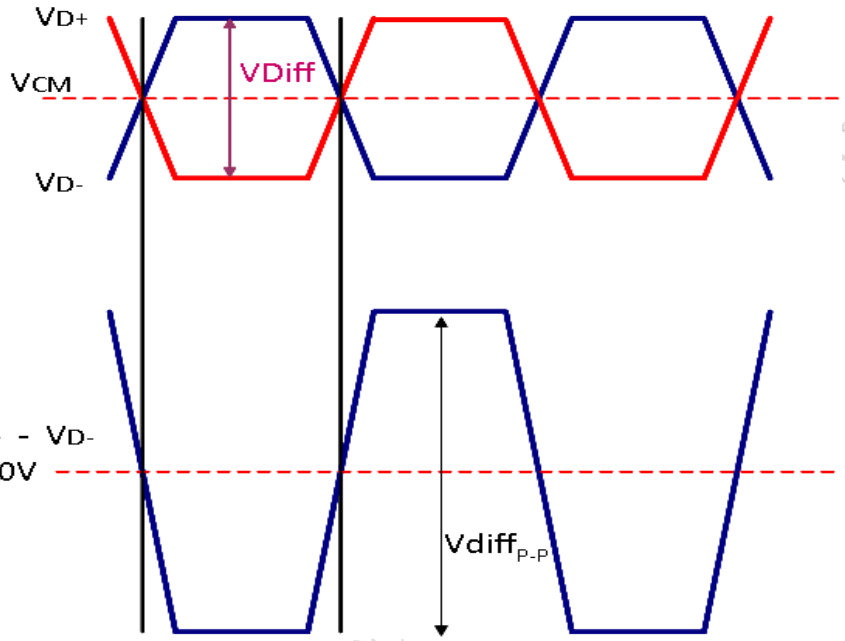

$Vdiff_{P-P} = [(VD+) - (VD-)] \times 2$

Display port main link					
		Min	Typ	Max	unit
VCM	RX input DC Common Mode Voltage		0		V
$VDiff_{P-P}$	Peak-to-peak Voltage at a receiving Device	150		1320	mV

Follow as VESA display port standard V1.1a

Display Port AUX_CH signal:

Differential AUX+ , AUX-
Which is Display pot AUX_CH

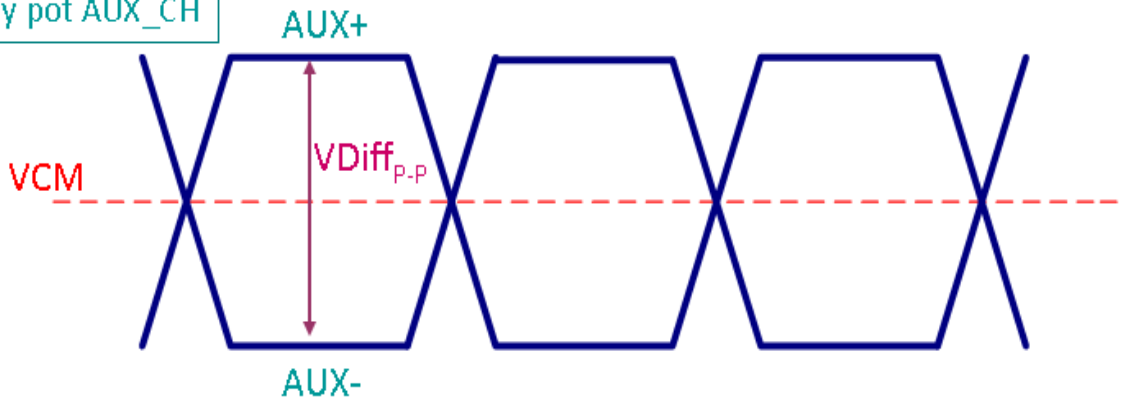

Display port AUX_CH					
		Min	Typ	Max	unit
VCM	AUX DC Common Mode Voltage		0		V
$VDiff_{P-P}$	AUX Peak-to-peak Voltage at a receiving Device	0.4	0.6-	0.8	V

Follow as VESA display port standard V1.1a.

Display Port VHPD signal:

Display port VHPD					
		Min	Typ	Max	unit
VHPD	HPD Voltage	2.25	-	2.75	V

Follow as VESA display port standard V1.1a.

AUO INTERNAL USE ONLY

5.1.3 Power ON/OFF Sequence

VDD power and lamp on/off sequence is as below. Interface signals are also shown in the chart. Signals from any system shall be Hi-Z state or low level when VDD is off.

Display Port panel power sequence:

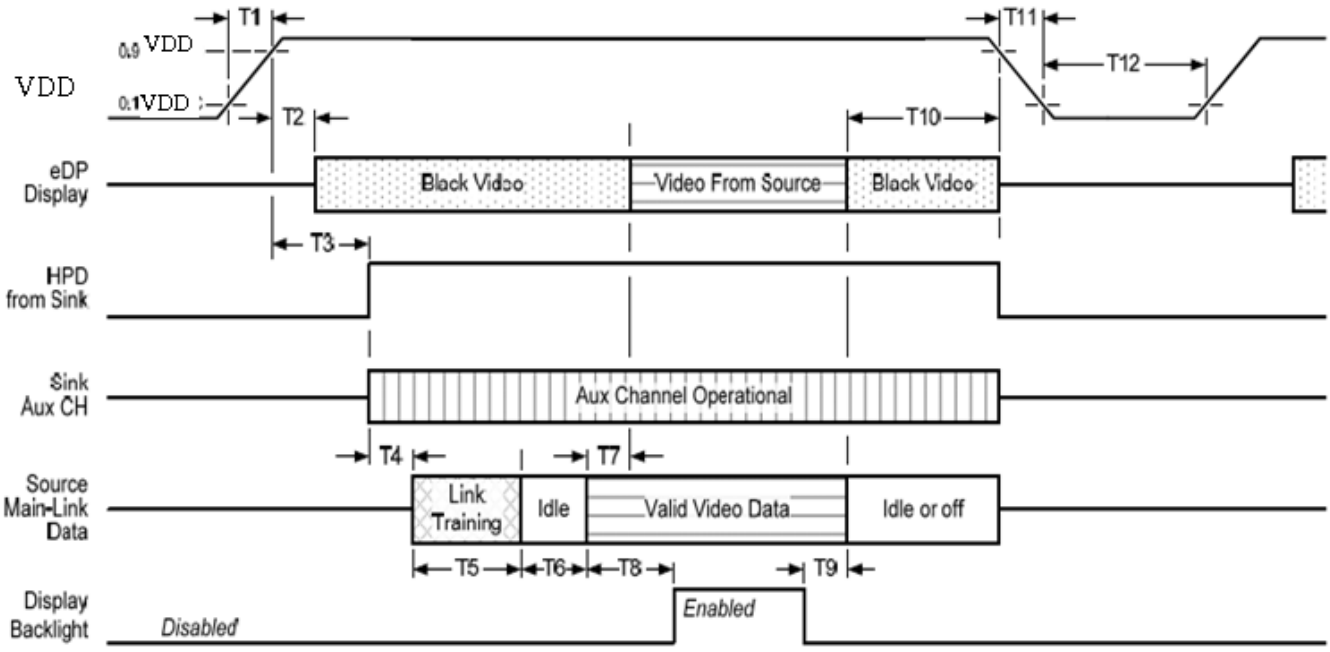

Display port interface power up/down sequence, normal system operation

Display Port AUX_CH transaction only:

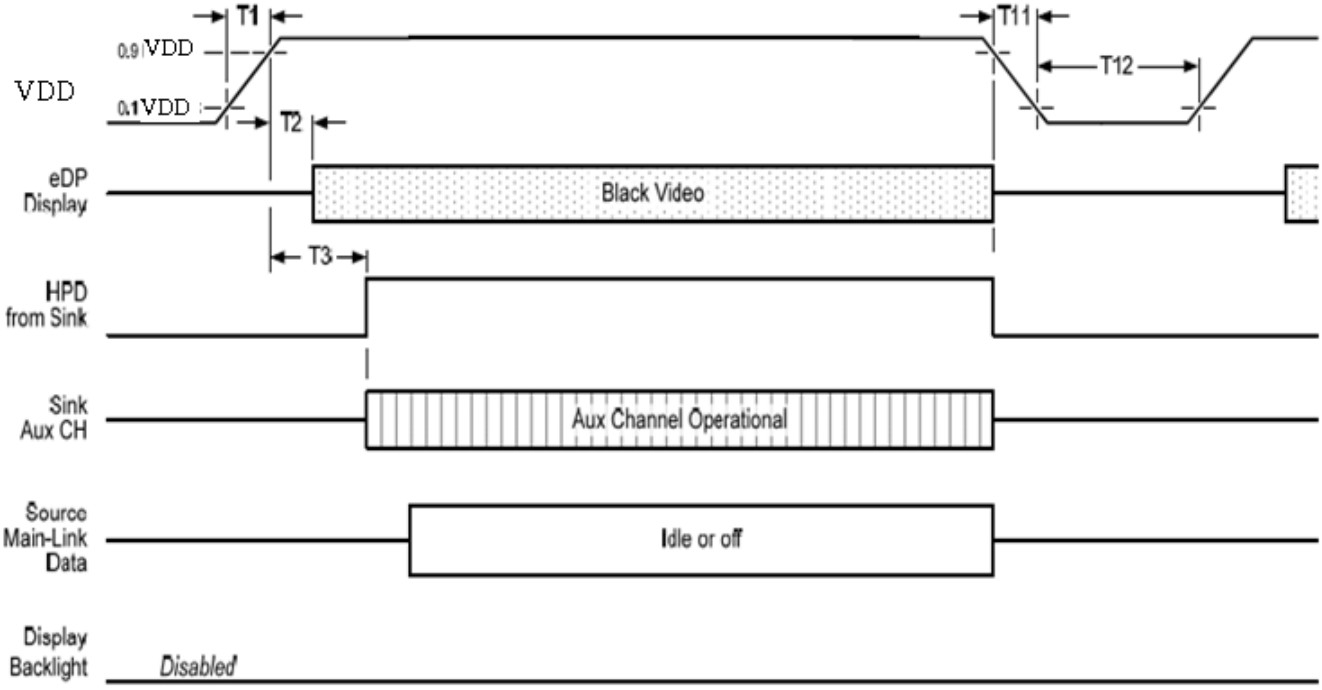

Display port interface power up/down sequence, AUX_CH transaction only

Display Port panel power sequence timing parameter:

Timing parameter	Description	Reqd. by	Limits			Notes
			Min.	Typ.	Max.	
T1	power rail rise time, 10% to 90%	source	0.5ms		10ms	
T2	delay from LCDVDD to black video generation	sink	0ms		200ms	prevents display noise until valid video data is received from the source
T3	delay from LCDVDD to HPD high	sink	0ms		200ms	sink AUX_CH must be operational upon HPD high.
T4	delay from HPD high to link training initialization	source				allows for source to read link capability and initialize.
T5	link training duration	source				dependant on source link to read training protocol.
T6	link idle	source				Min accounts for required BS-Idle pattern. Max allows for source frame synchronization.
T7	delay from valid video data from source to video on display	sink	0ms		50ms	max allows sink validate video data and timing.
T8	delay from valid video data from source to backlight enable	source				source must assure display video is stable.
T9	delay from backlight disable to end of valid video data	source				source must assure backlight is no longer illuminated.
T10	delay from end of valid video data from source to power off	source	0ms		500ms	
T11	power rail fall time, 905 to 10%	source			10ms	
T12	power off time	source	500ms			

1: The sink must include the ability to generate black video autonomously. The sink must automatically enable black video under the following conditions:
-upon LCDVDD power on (with in T2 max)-when the "Novideostream_Flag" (VB-ID Bit 3) is received from the source (at the end of T9).
-when no main link data, or invalid video data, is received from the source. Black video must be displayed within 64ms (typ) from the start of either condition. Video data can be deemed invalid based on MSA and timing information, for example.

Note 2: The sink may implement the ability to disable the black video function, as described in Note 1, above, for system development and debugging purpose.

Note 3: The sink must support AUX_CH polling by the source immediately following LCDVDD power on without causing damage to the sink device (the source can re-try if the sink is not ready). The sink must be able to respond to an AUX_CH transaction with the time specified within T3 max.

AUO CONFIDENTIAL FOR Distec INTERNAL USE ONLY

5.2 Backlight Unit

5.2.1 Parameter guideline for LED

Following characteristics are measured under a stable condition using an inverter at 25℃ (Room Temperature):

Symbol	Parameter	Min.	Typ.	Max.	Unit	Remark
VLED	Input Voltage	10.8	12	13.2	[Volt]	
I_{VLED}	Input Current	---	152	180	[mA]	100% Brightness (VLED = 12V)
P_{VLED}	Power Consumption	---	1.82	2.16	[Watt]	100% Brightness (VLED = 12V)
I_F	LED Forward Current	---	19.6	---	[mA]	Ta = 25°C
VEN	LED Enable Input High Level	1.8	-	5.5	[Volt]	
	LED Enable Input Low Level	-	-	0.8	[Volt]	
VPWM	PWM Logic Input High Level	1.8	-	5.5	[Volt]	
	PWM Logic Input Low Level	-	-	0.8	[Volt]	
PWM Input Frequency	FPWM	200	-	20K	Hz	
PWM Duty Ratio	Duty	10		100	%	
Operation Life	---	20,000	30,000	---	Hrs	(Ta=25℃), Note 2 I_F=19.6mA

Note 1: Ta means ambient temperature of TFT-LCD module.

Note 2: V_{LED}, I_{VLED}, P_{VLED} are defined for LED backlight.(100% duty of PWM dimming)

Note 3: If G101UAN01.0 module is driven by high current or at high ambient temperature & humidity condition. The operating life will be reduced.

Note 4: Operating life means brightness goes down to 50% initial brightness. Minimum operating life time is estimated data.

AUO CONFIDENTIAL FOR Distec INTERNAL USE ONLY

6. Signal Characteristic

6.1 Pixel Format Image

Following figure shows the relationship between input signal and LCD pixel format.

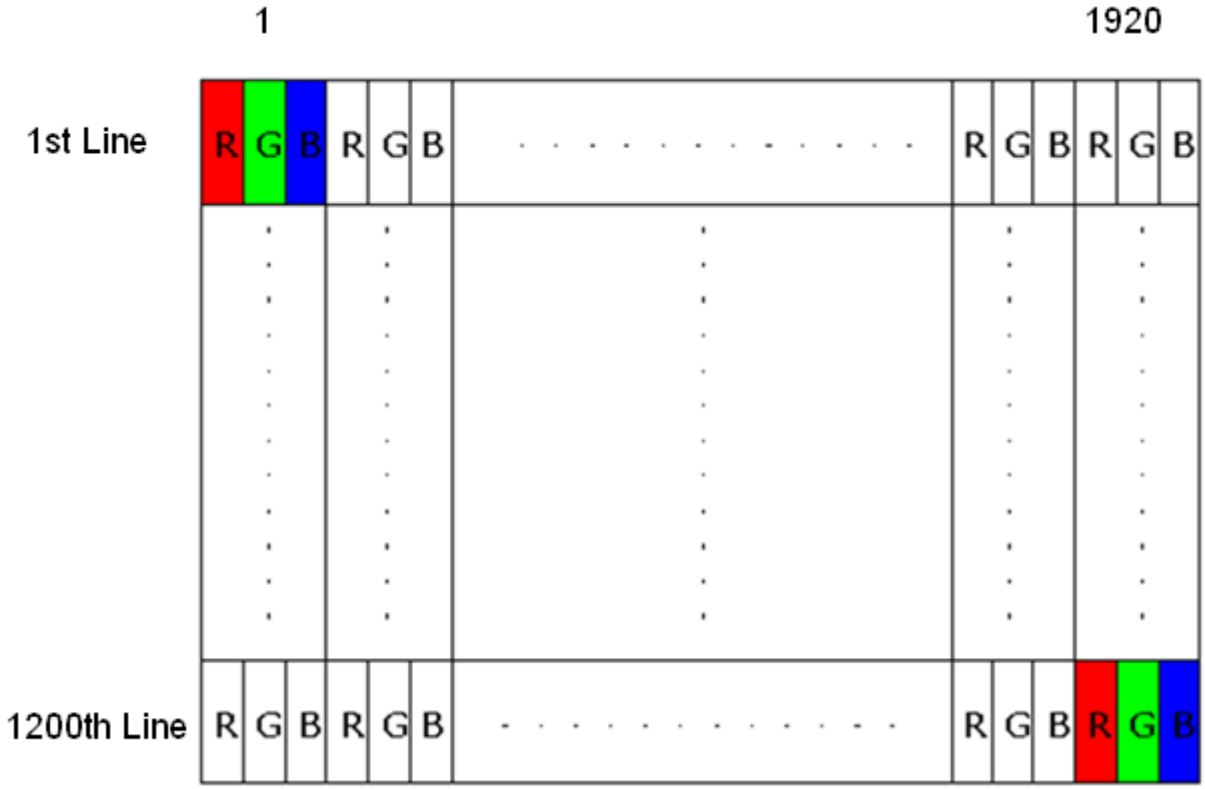

AUO CONFIDENTIAL FOR
ONLY

6.2 Signal Description

The module uses a eDP1.2 receiver embedded in AUO's ASIC. eDP 1.2 is a differential signal technology for LCD interface and a high-speed data transfer device.

6.2.1 eDP Connector Description

Physical interface is described as for the connector on module.

These connectors are capable of accommodating the following signals and will be following components.

Connector Name / Designation	For Signal Connector
Manufacturer	IPEX or compatible
Type / Part Number	IPEX 20455-030E-12 or compatible
Mating Housing/Part Number	IPEX 20455-030T-11 or compatible

6.2.2 Pin Assignment (2 Lane)

eDP lane is a differential signal technology for LCD interface and high speed data transfer device.

AUO CONFIDENTIAL FOR Distec INTERNAL USE ONLY

PIN NO	Symbol	Function
1	NC	No Connect
2	H_GND	High Speed Ground
3	Lane 1_N	Comp Signal Link Lane 1
4	Lane 1_P	True Signal Link Lane 1
5	H_GND	High Speed Ground
6	Lane0_N	Comp Signal Link Lane 0
7	Lane0_P	True Signal Link Lane 0
8	H_GND	High Speed Ground
9	AUX_CH_P	True Signal Auxiliary Ch.
10	AUX_CH_N	Comp Signal Auxiliary Ch.
11	H_GND	High Speed Ground
12	VDD	LCD logic and driver power
13	VDD	LCD logic and driver power
14	NC	No connect
15	LCD GND	LCD logic and driver ground
16	LCD GND	LCD logic and driver ground
17	HPD	HPD signale pin
18	BL_GND	Backlight_ground
19	BL_GND	Backlight_ground
20	BL_GND	Backlight_ground
21	BL_GND	Backlight_ground
22	VEN	Backlight On / Off
23	VPWM	System PWM signal Input
24	NC	No connect
25	NC	No connect
26	VLED	Backlight power (10.8V~13.2V)
27	VLED	Backlight power (10.8V~13.2V)
28	VLED	Backlight power (10.8V~13.2V)
29	VLED	Backlight power (10.8V~13.2V)
30	NC	No Connect

AUO CONFIDENTIAL FOR Distec INTERNAL USE ONLY

6.3 Interface Timing

6.3.1 Timing Characteristics

Signal		Symbol	Min.	Typ.	Max.	Unit
Clock Frequency		1/ T_{Clock}	155.43	157.08	158.73	MHz
Vertical Section	Period	T_V	1206	1212	1218	T_{Line}
	Active	T_{VD}	1200			
	Blanking	T_{VB}	6	12	18	
Horizontal Section	Period	T_H	2148	2160	2172	T_{Clock}
	Active	T_{HD}	1920			
	Blanking	T_{HB}	228	240	252	
Frame Rate		F	---	60	---	Hz

Note : DE mode.

6.3.2 Input Timing Diagram

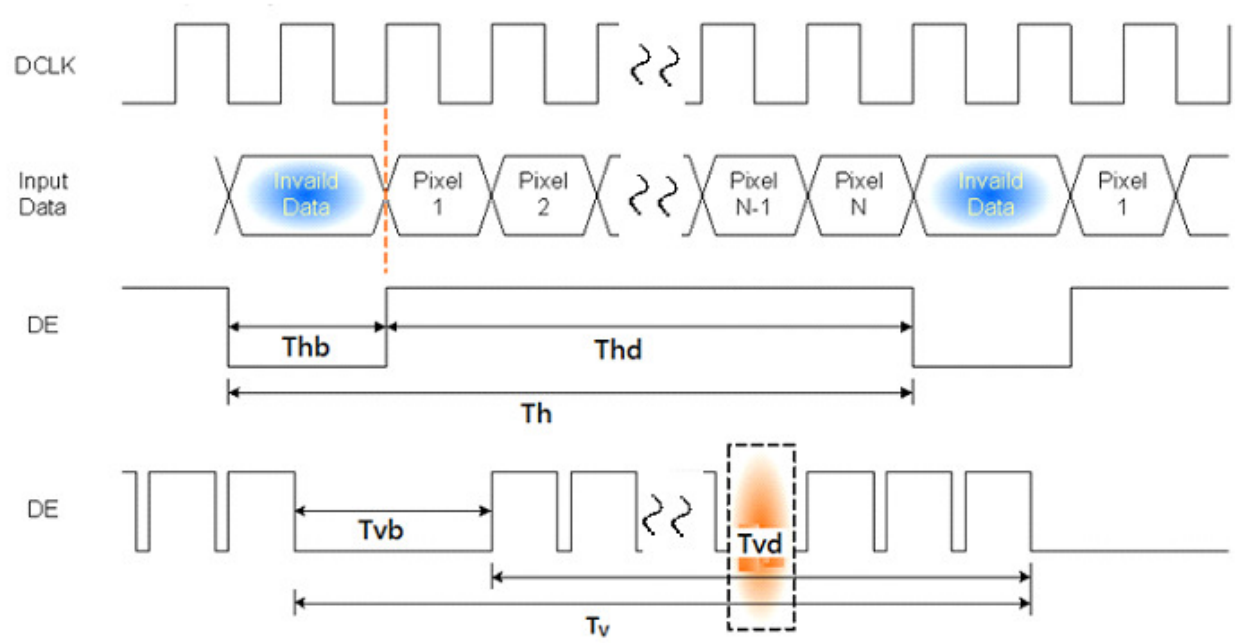

AUO CONFIDENTIAL USE ONLY

7. Reliability Test Criteria

Items	Required Condition	Note
Temperature Humidity Bias	40 °C /90%,300Hr	
High Temperature Operation	60 °C, 300Hr (center point of panel surface)	
Low Temperature Operation	-10 °C, 300Hr	
Hot Storage	60 °C, 300Hr	
Cold Storage	-20 °C, 300Hr	
Thermal Shock Test	-10 °C /30 min , 60 °C /30 min , 20cycles	
Hot Start Test	60 °C /1 Hr min. power on/off per 5 minutes, 5 times	
Cold Start Test	-10 °C /1 Hr min. power on/off per 5 minutes, 5 times	
On/off test	On/10 sec, Off/10 sec, 30,000 cycles	
ESD	Contact : ± 8KV/ operation, Class B Air : ± 15KV / operation, Class B	Note 1
Shock test	220G,2ms, Half-sine wave, 1 times for each direction (±X, ±Y, ±Z), non-operation	
Vibration test	1.5G, (10~500Hz, random), 30 mins / axis (X, Y, Z), non-operation	

Note1: According to EN61000-4-2 , ESD class B: Some performance degradation allowed. No data lost

. Self-recoverable. No hardware failures.

Note2:

- Water condensation is not allowed for each test items.
- Each test is done by new TFT-LCD module. Don't use the same TFT-LCD module repeatedly for reliability test.
- The reliability test is performed only to examine the TFT-LCD module capability.
- To inspect TFT-LCD module after reliability test, please store it at room temperature and room humidity for 24 hours at least in advance.

AUO CONFIDENTIAL FOR Disec INTERNAL USE ONLY

8. Mechanical Characteristics

8.1 Outline Dimension (Front View)

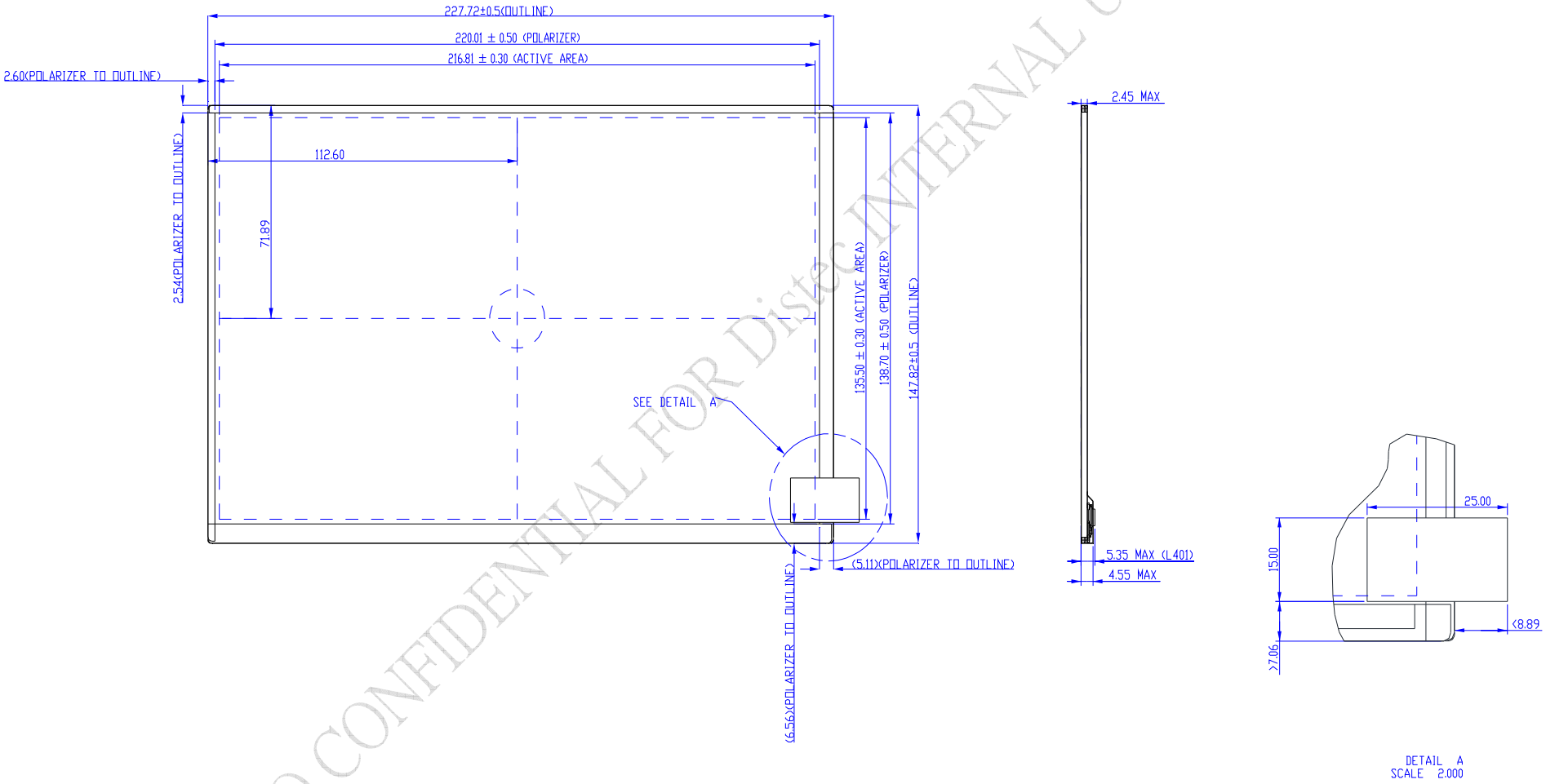

AUO CONFIDENTIAL FOR Disteo INTERNAL USE ONLY

8.2 Outline Dimension (Rear View)

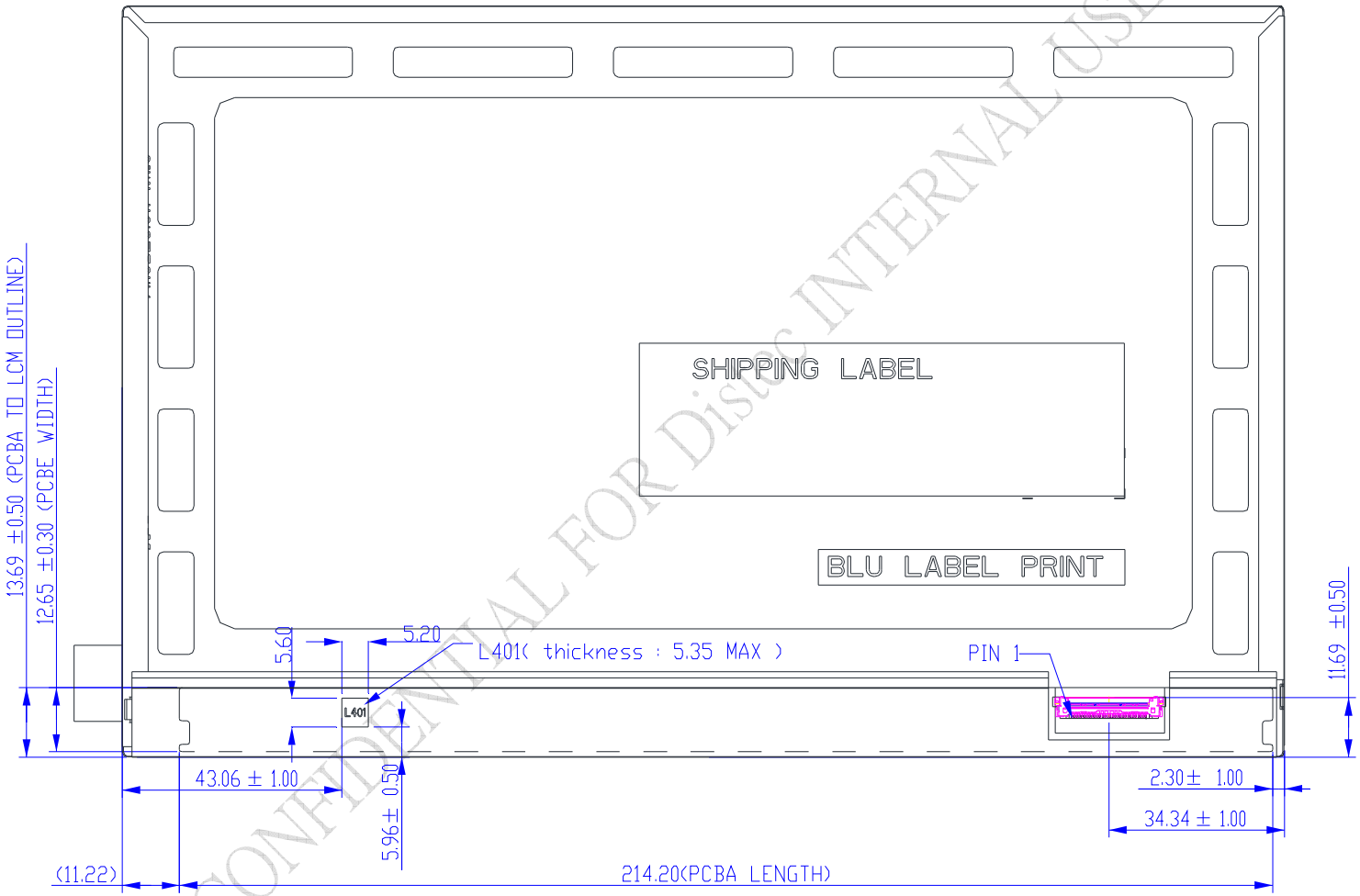

AUO CONFIDENTIAL FOR Disto INTERNAL USE ONLY

9. Label and Packaging

9.1 Shipping Label (on the rear side of TFT-LCD display)

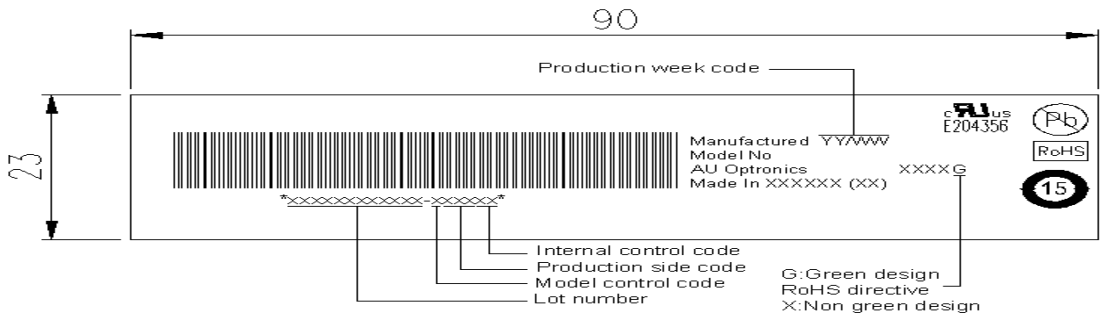

9.2 Carton/Pallet Package

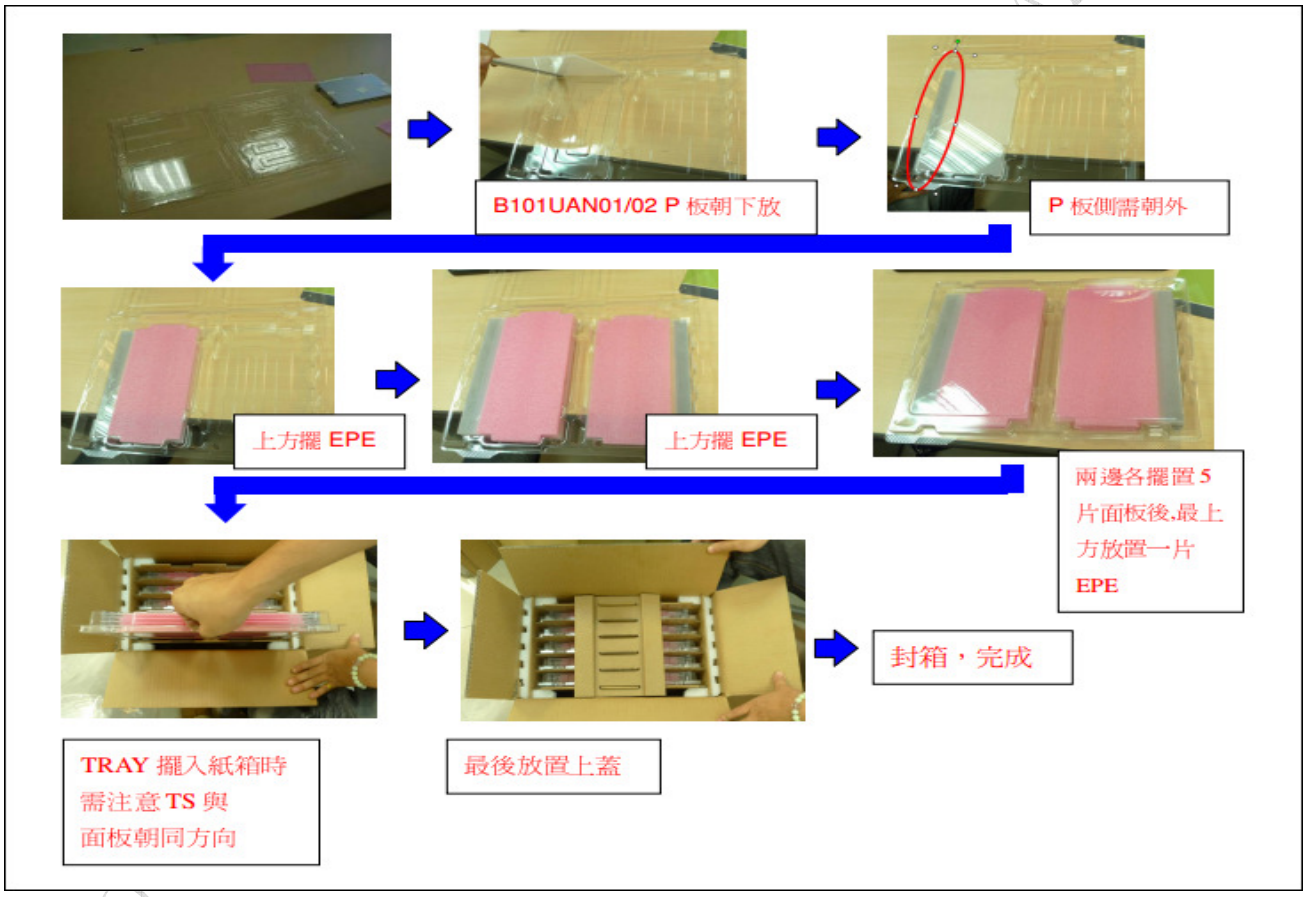

Max capacity：50 TFT-LCD module per carton

Outside dimension of carton: 445mm(H)*283mm(W)*377mm(H)

Pallet size： 1150 mm * 910 mm * 132mm

入库堆栈层数：3 层

Box stacked

Module by air：(4*2) *3layers，one pallet put 24 boxes，total 1250pcs module

Module by sea：(4 *2) *3layers+(4 *2) *2layers, two pallets put 40boxes，total 2000pcs module

Module by sea_HQ：(4*2) *3 layers+(4 *2) *3layers, two pallets put 48 boxes，total 2400pcs module

INTERNAL USE ONLY

10 Safety

10.1 Sharp Edge Requirements

There will be no sharp edges or comers on the display assembly that could cause injury.

10.2 Materials

10.2.1 Toxicity

There will be no carcinogenic materials used anywhere in the display module. If toxic materials are used, they will be reviewed and approved by the responsible AUO toxicologist.

10.2.2 Flammability

All components including electrical components that do not meet the flammability grade UL94-V1 in the module will complete the flammability rating exception approval process.

The printed circuit board will be made from material rated 94-V1 or better. The actual UL flammability rating will be printed on the printed circuit board.

10.3 Capacitors

If any polarized capacitors are used in the display assembly, provisions will be made to keep them from being inserted backwards.

10.4 National Test Lab Requirement

The display module will satisfy all requirements for compliance to:

UL 60950-1 second edition	U.S.A. Information Technology Equipment

AUO CONFIDENTIAL FOR Distec INTERNAL USE ONLY

Our company network supports you worldwide with offices in Germany, Austria, Switzerland, Great Britain and the USA. For more information please contact:

Headquarters

Germany

FORTEC Elektronik AG
Lechwiesenstr. 9
86899 Landsberg am Lech

Phone: +49 8191 91172-0
E-Mail: sales@fortecag.de
Internet: www.fortecag.de

Fortec Group Members

Austria

FORTEC Elektronik AG
Office Vienna
Nuschinggasse 12
1230 Wien

Phone: +43 1 8673492-0
E-Mail: office@fortec.at
Internet: www.fortec.at

Germany

Distec GmbH
Augsburger Str. 2b
82110 Germering

Phone: +49 89 894363-0
E-Mail: info@distec.de
Internet: www.distec.de

Switzerland

ALTRAC AG
Bahnhofstraße 3
5436 Würenlos

Phone: +41 44 7446111
E-Mail: info@altrac.ch
Internet: www.altrac.ch

United Kingdom

Display Technology Ltd.
5 The Oaks Business Village
Revenge Road, Lordswood
Chatham, Kent, ME5 8LF

Phone: +44 1634 672755
E-Mail: info@displaytechnology.co.uk
Internet: www. displaytechnology.co.uk

USA

Apollo Display Technologies, Corp.
87 Raynor Avenue,
Unit 1Ronkonkoma,
NY 11779

Phone: +1 631 5804360
E-Mail: info@apollodisplays.com
Internet: www.apollodisplays.com