FORTEC
ELEKTRONIK AG

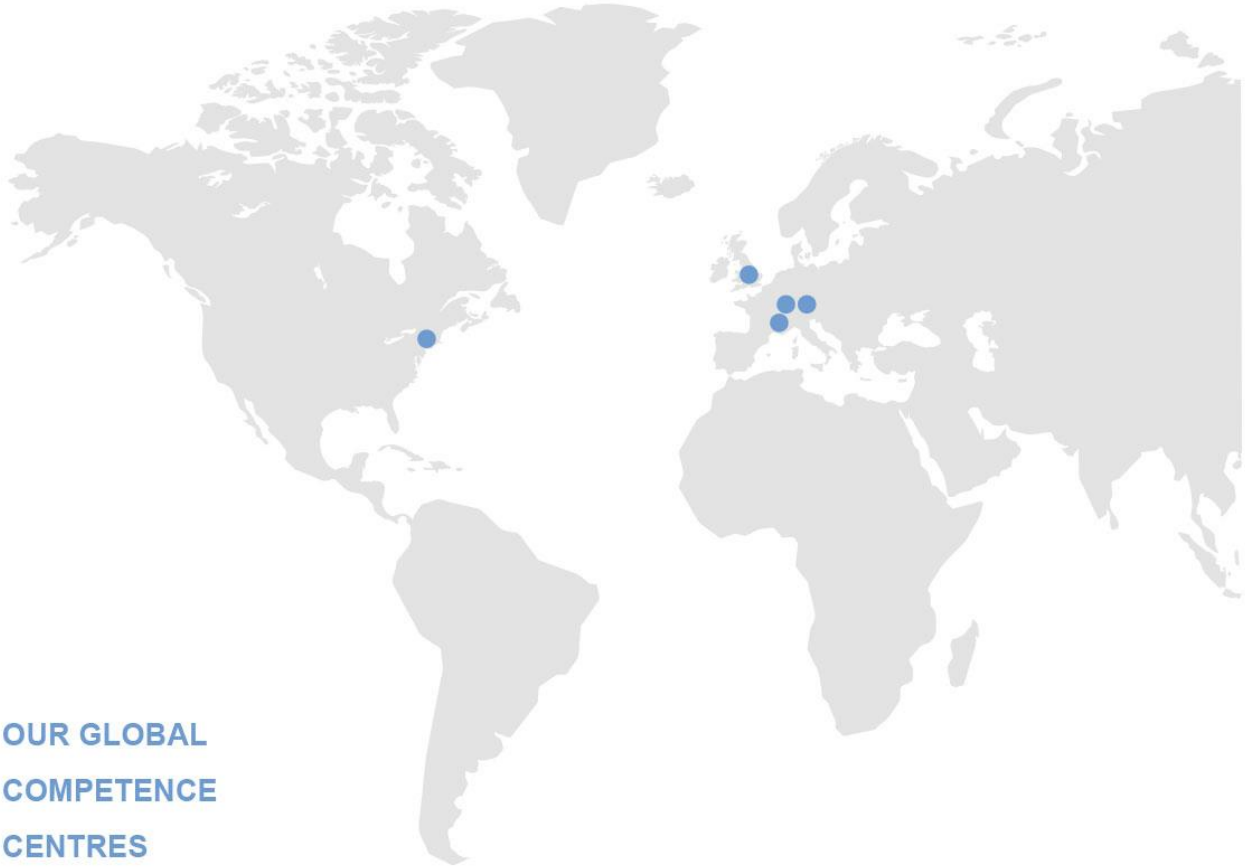

OUR GLOBAL COMPETENCE CENTRES

APOLLO DISPLAY TECHNOLOGIES

DISTEC

DISPLAY TECHNOLOGY

FORTEC
ELEKTRONIK AG

Datasheet

LG Display

LB070WV8-SL01

HD-10-089

The information contained in this document has been carefully researched and is, to the best of our knowledge, accurate. However, we assume no liability for any product failures or damages, immediate or consequential, resulting from the use of the information provided herein. Our products are not intended for use in systems in which failures of product could result in personal injury. All trademarks mentioned herein are property of their respective owners. All specifications are subject to change without notice.

SPECIFICATION
FOR
APPROVAL

( ) Preliminary Specification
(●) Final Specification

Title	7.0"W (800 X RGB X 480) TFT- LCD

BUYER	
MODEL	

SUPPLIER	LG Display Co., Ltd.
MODEL	LB070WV8
SUFFIX	SL01

SIGNATURE	DATE
/	
/	
/	

Please return 1 copy for your confirmation
With your signature and comments.

APPROVED BY	DATE
Y. T. Woo / Chief Engineer	
REVIEWED BY	
B. C. Lee / Senior Engineer	
PREPARED BY	2015.11.30
T. I. Oh / Engineer	

Product Engineering Dept.
LG Display Co., Ltd

Contents

No.	ITEM	Page
	COVER	0
	CONTENTS	1
	RECORD OF REVISIONS	2
1	SUMMARY	3
2	FEATURES	3
3	GENERAL DESCRIPTION	4
4	ABSOLUTE MAXIMUM RATINGS	5
5	ELECTRICAL SPECIFICATIONS	6
5-1	ELECTRICAL CHARACTERISTICS	6
5-2	INTERFACE CONNECTIONS	8
5-3	SIGNAL TIMING SPECIFICATIONS	12
5-4	LVDS SIGNAL SPECIFICATIONS	12
5-5	COLOR DATA REFERENCE	15
5-6	POWER SEQUENCE	16
6	ELECTRO-OPTICAL SPECIFICATIONS	17
7	MECHANICAL CHARACTERISTICS	21
8	RELIABILITY	24
9	INTERNATIONAL STANDARDS	25
9-1	SAFETY	25
9-2	ENVIRONMENT	25
10	PACKING	26
10-1	DESIGNATION OF LOT MARK	26
10-2	PACKING FORM	27
11	PRECAUTIONS	28
11-1	MOUNTING PRECAUTIONS	28
11-2	OPERATING PRECAUTIONS	28
11-3	ELECTROSTATIC DISCHARGE CONTROL	29
11-4	PRECAUTIONS FOR STRONG LIGHT EXPOSURE	29
11-5	STORAGE	29
11-6	HANDLING PRECAUTIONS FOR PROTECTION FILM	29
11-7	PRECAUTIONS FOR ATTACHING THE TOUCH PANEL PROCESS	29

Record of Revisions

Revision No.	Revision Date	Page	Description	Note
1.0	Jun.25. 2012	-	First Draft	
1.1	Nov.06. 2012	8	Change Connector name	
		22	Change front view (Connector name)	
		23	Change rear view (Connector name)	
1.2	Nov.22. 2012	8	Change Connector pin configuration	
1.3	Nov.30. 2015	25	International Standards : Environment	

1. Summary

This module utilizes amorphous silicon thin film transistors and a 15:9 aspect ratio. The 7.0” active matrix liquid crystal display allows 16M colors to be displayed by LVDS interface is available.

2. Features

- Utilizes a panel with a 15:9 aspect ratio.
- The 7.0” screen produces a high resolution image that is composed of 384,000 pixel elements in a stripe arrangement.
- By adopting In Plane Switching (IPS) technology, provide a wide viewing angle.
- By adopting an active matrix drive, a picture with high contrast is realized.
- By using of COG mounting technology, the module became thin, light and compact.
- By adopting a high aperture panel, high transmittance color filter and high transmission polarizing plates, transmittance ratio is realized.
- Gray scale or the brightness of the sub-pixel color is determined with a 8-bit gray scale signal.
- By adopting LVDS interface, the module has a good performance in terms of EMI.

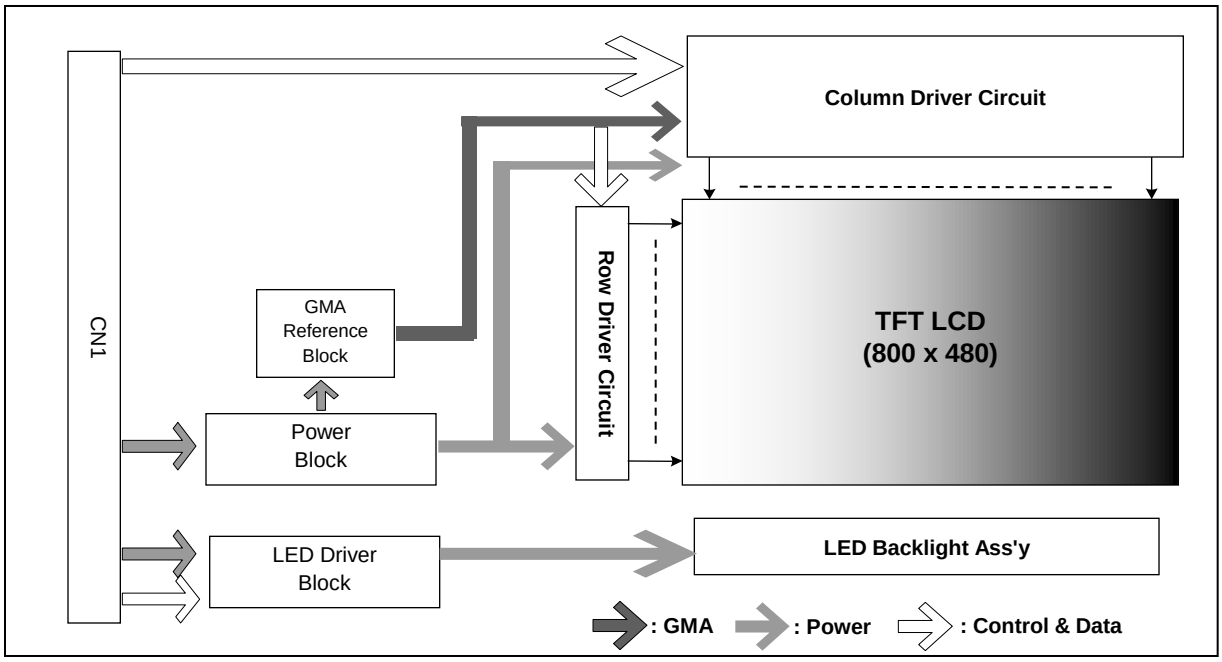

3. General Description

Active Screen Size	7.0 inches diagonal
Outline Dimension	170 mm (H) × 106.3 mm (V) X 10 mm (D) (Typ.)
Pixel Pitch	0.1905 mm x 0.1905 mm
Pixel Format	800 horiz. by 480 vert. Pixels, RGB stripe arrangement
Color Depth	8bit, 16M colors
Luminance, White	450 cd/m^2 (Center 1point ,Typ.)
Viewing Angle (CR>10)	Viewing angle free (R/L 178 (Min.), U/D 178 (Min.))
Power Consumption	Total 3.4W (Typ.) [Logic= 0.9W, Backlight= 2.5W (BL_DIM=100%)]
Weight	220.0g (MAX)
Display Mode	Transmissive mode, Normally Black
Surface Treatment	Anti-glare treatment of the front polarizer

4. Absolute Maximum Ratings

The following items are maximum values which, if exceeded, may cause faulty operation or damage to the LCD module.

Table 1. ABSOLUTE MAXIMUM RATINGS

Parameter		Symbol	Value		Unit	Note
			Min	Max		
Power Supply Voltage	LCD	V_{CC}	-0.3	3.6	V	
	Backlight	V_{BL}	-0.3	12.6	V	
Storage Temperature		T_{ST}	-30	85	°C	1
Operating Temperature		T_{OP}	-30	80	°C	2,3,

Note 1. Temperature and relative humidity range are shown in the figure below.
Wet bulb temperature should be Max. 58℃. Condensation of dew must be avoided, because it may cause electrical current leakage, and deterioration of performance and quality.
2. The operating temperature means that LCD Module guarantees operation of the circuit. All the contents of Electro-optical specifications are guaranteed under the room temperature condition.
3. This temperature is ambient temperature with regard to the heat which is generated under operation of circuit and backlight on. (reference value)

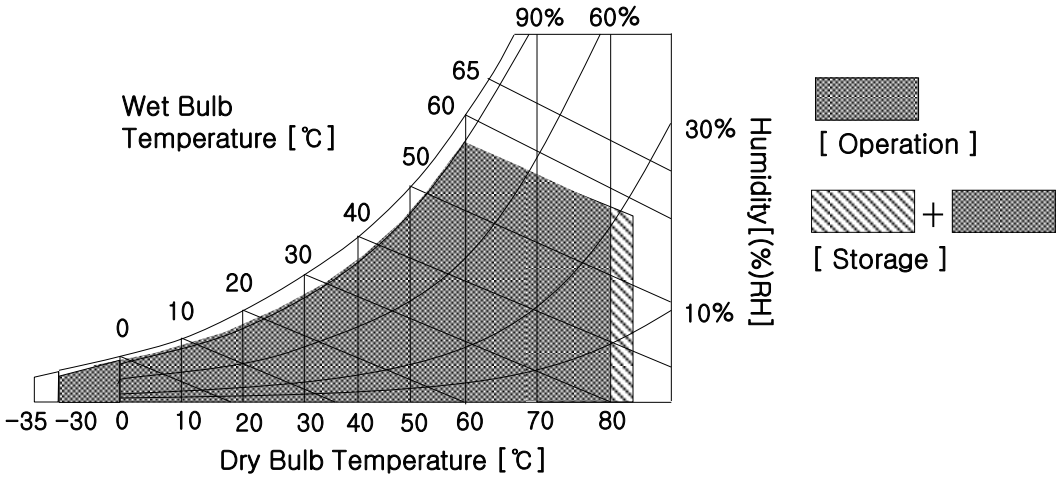

5. Electrical Specifications

5-1. Electrical Characteristics

It requires two power inputs. One is employed to power for the LCD circuit. The other is used for the LED backlight.

Table 2. LCD DRIVING CIRCUIT ELECTRICAL CHARACTERISTICS

Parameter		Symbol	Value			Unit	Note
			Min	Typ	Max		
Power Supply Voltage		V_{LCD}	3.0	3.3	3.6	V	
Power Supply Current	Mosaic	I_{LCD}	-	262	341	mA	1
	White	I_{LCD}	-	310	403	mA	
Power Consumption		P_{LCD}	-	0.9	1.3	Watt	
Rush Current		I_{RUSH}	-	-	1.5	A	2

Note 1. The specified current and power consumption are under the V_{LCD}=3.3V, Ta=25 ± 2°C, f_V=60Hz condition whereas mosaic pattern(8 x 6) and white pattern are displayed and f_V is the frame frequency.
2. The duration of rush current is about 2ms and rising time of power input is 0.5ms (min.). (V_{LCD}=3.3V, Ta=25 ± 2°C, f_V=60Hz)
3. The recommended operating conditions show the ranges in which the device can operate normally. Operation beyond the limit of the recommended operation conditions is not assured, even though operating conditions are within the limit of the maximum ratings.

White : 63 Gray
Black : 0 Gray

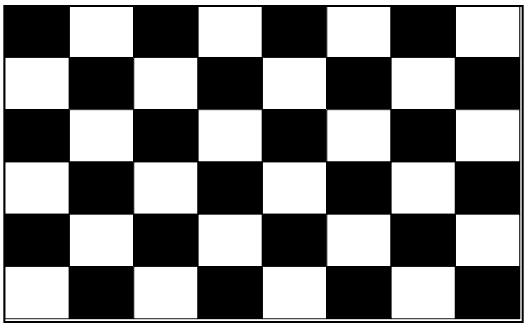

Mosaic Pattern(8 x 6)

White : 63 Gray

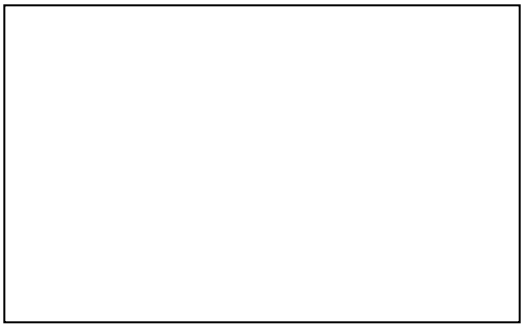

White Pattern

Table 3. BACKLIGHT ELECTRICAL CHARACTERISTICS

Parameter			Symbol	Values			Unit	Note
				Min	Typ	Max		
Power Supply Voltage			V_{BL}	11	12	12.5	V	1
Power Supply Current			I_{BL}	-	210	280	mA	
Power Consumption			I	-	2.5	3.5	W	
Input & Control Signal	On/Off	On	Von	2	-	12	V	
		Off	Voff	-	0	0.5	V	
	Brightness Adjust		Dimming	10		100	%	On Duty
	BL_DIM Frequency		F_{PWM}	0.5	1	20	KHz	3
	Pulse Duty Level (BL_DIM)		V_H	2.7	-	3.3	V	HIGH : on duty LOW : off duty
			V_L	0.0	-	0.3	V	
Life Time				30,000			Hrs	4

Note 1. Electrical characteristics are determined after the unit has been 'ON' and stable for approximately 15 minutes at 25±2°C. The specified current and power consumption are under the typical supply Input voltage 12V(BL_DIM=100%), it is total power consumption.

2. The permissible forward current of LED vary with environmental temperature.

Ambient Temperature vs. Allowable Forward Current

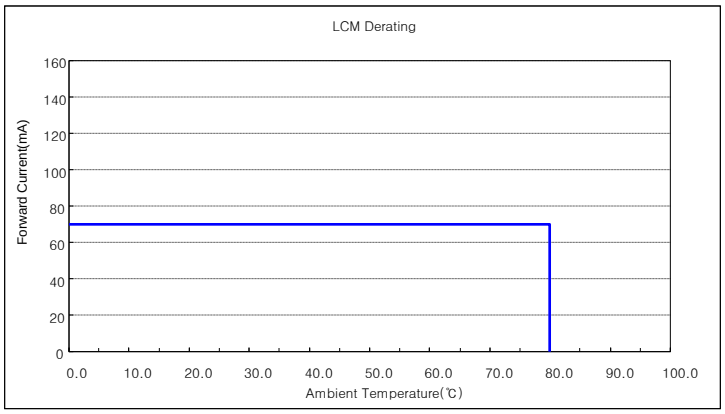

3. PWM frequency should be optimized for minimal wavy and audible noise.
4. The life time is determined as the time at which brightness of LED is 50% compare to that of initial value at the typical LED current.

5-2. Interface Connections

This LCD module employs only one interface connections, 30-pin connector(CN1)

5-2-1. User Connector(CN1) Pin Configuration

The electronics interface connector is a model FI-X30SSLA (Manufactured by JAE)

Table 4-1. USER CONNECTOR(CN1) PIN CONFIGURATION

Pin No	Name	I/O	Description	Note
1	VLED	I	Power Supply, 12V Typ.	3
2	VLED	I	Power Supply, 12V Typ.	
3	VLED	I	Power Supply, 12V Typ.	
4	NC	-	No Connection	4
5	GND	I	Ground	1
6	LED_EN	I	High(Typ.3.3V): Backlight On, Low(0V): Backlight Off	
7	PWM	I	PWM input for dimming control	
8	TP	I	Test Pin. It should be floating	
9	TP	I	Test Pin. It should be floating	
10	GND	I	Ground	1
11	RDP	I	Positive LVDS differential data input	
12	RDM	I	Negative LVDS differential data input	
13	GND	I	Ground	1
14	RCLKP	I	Positive LVDS differential clock input	
15	RCLKM	I	Negative LVDS differential clock input	
16	GND	I	Ground	1
17	RCP	I	Positive LVDS differential data input	
18	RCM	I	Negative LVDS differential data input	
19	GND	I	Ground	1
20	RBP	I	Positive LVDS differential data input	
21	RBM	I	Negative LVDS differential data input	
22	GND	I	Ground	1
23	RAP	I	Positive LVDS differential data input	
24	RAM	I	Negative LVDS differential data input	
25	GND	I	Ground	1
26	SHLI	I	Reverse scan L/R/U/D	5
27	GND	I	Ground	1
28	GND	I	Ground	
29	VCC	I	Power Supply for module, 3.3V Typ.	2
30	VCC	I	Power Supply for module, 3.3V Typ.	

1. Connector

1.1 LCD : FI-X30SSLA-HF

1.2 Mating :

FI-X30SSLA (Manufactured by JAE) or Equivalent

Rear view of LCM

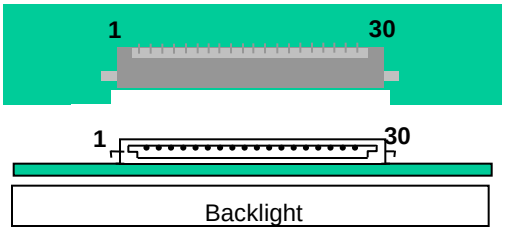

Note 1. All GND(ground) pins should be connected together.
2. All VCC pins should be connected together.
3. All VBL pins should be connected together.
4. Make sure that NC pins should be floated.
5. Display Direction as following pictures

Pin Status		Scanning Direction
SHLI	L	Left → Right (Up → Down)
	H	Right → Left (Down → Up)

SHLI	Display Image
L	
H	

5-2-2. Connection between Host system and LVDS receiver

If input data is 8bit, connect MSB 2bit of R,G,B to TD0~TD5 pin of LVDS Tx. Refer to FIG 1 for more detail.

Fig 1. REQUIRED SIGNAL ASSIGNMENT FOR LVDS TRANSMITTER(THC63LVDM83R)

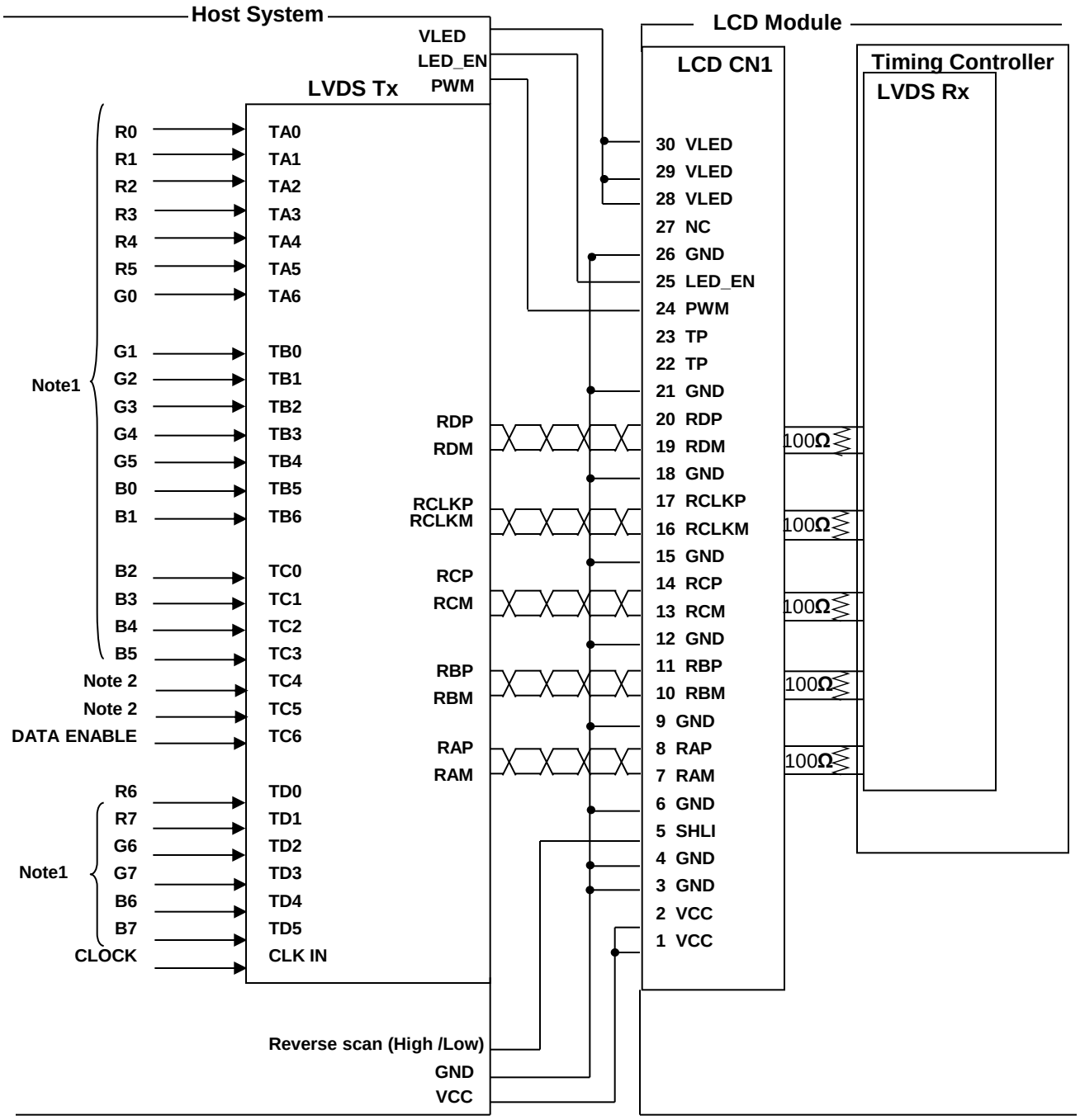

5-3. Signal Timing Specifications

Table 5 shows the signal timing required at the input of the LVDS transmitter. All of the interface signal timings should be satisfied with the following specification for normal operation.

Table 5. SIGNAL TIMING CHARACTERISTICS

Ta=25℃

Item		Symbol	Min.	Typ.	Max.	Unit	Remarks
DCLK	Frequency	f_{DOTCLK}	31.95	33.26	34.60	MHz	
	Period	$1/ f_{DOTCLK}$	28.90	30.06	31.30	ns	
Horizontal	Total Period	t_H	1024	1056	1088	clk	
	Display Area Period	t_{HDISP}	800	800	800		
	Blank Period	t_{HB}	224	256	288		
Vertical	Total Period	t_V	520	525	530	line	
	Display Area Period	t_{VDISP}	480	480	480		
	Blank Period	t_{VB}	40	45	50		

Note:
1. DE Only mode operation. The input of Hsync & Vsync signal does not have an effect on LCD normal operation.
2. The performance of the electro-optical characteristics may be influenced by variance of the vertical refresh rates.

5-4. LVDS Signal Specifications

5-4-1. DC Specification

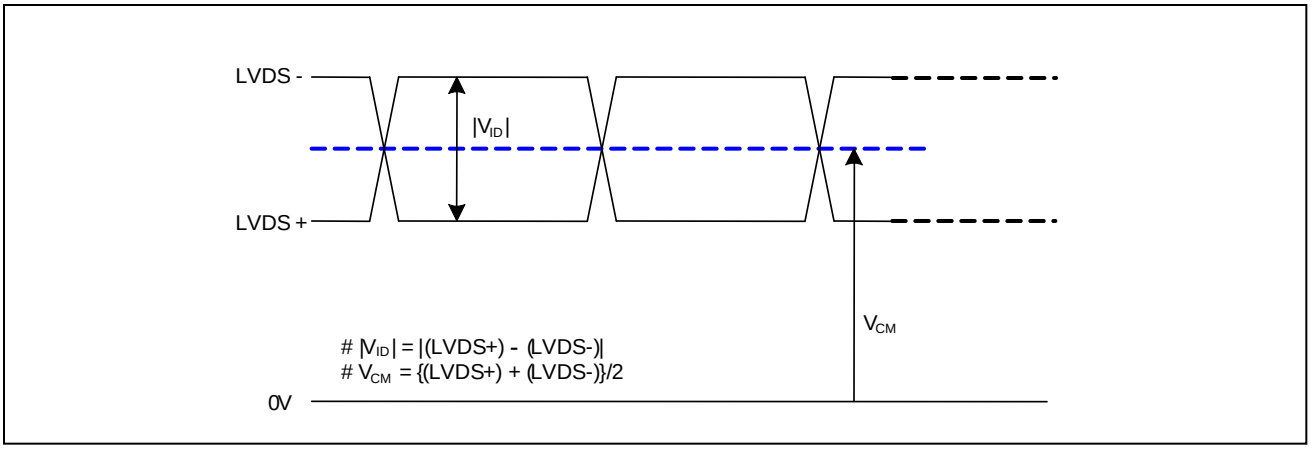

Parameter	Symbol	Min	Typ	Max	Unit	Notes
LVDS Differential Voltage	$\|V_{ID}\|$	200	-	600	mV	-
LVDS Input Common Mode Voltage	V_{CM}	$\| V_{ID} \|/2$	1.2	VCC-($\|V_{ID}\|$)/2	V	-
Positive-going Input Threshold Voltage	V_{TH}	-	-	100	mV	-
Negative-going Input Threshold Voltage	V_{TL}	-100	-	-	mV	-

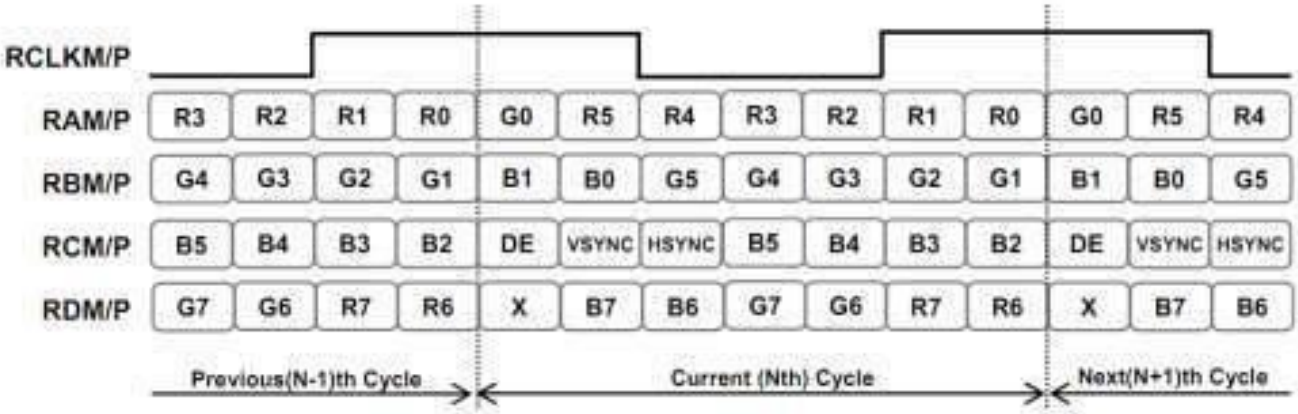

5-4-2. AC Specification

Parameter	Symbol	Min	Typ	MAx	Unit
Input Data Position for Bit0	T_{RIP0}	-	0	-	ns
Input Data Position for Bit1	T_{RIP1}	-	T/7	-	ns
Input Data Position for Bit2	T_{RIP2}	-	2T/7	-	ns
Input Data Position for Bit3	T_{RIP3}	-	3T/7	-	ns
Input Data Position for Bit4	T_{RIP4}	-	4T/7	-	ns
Input Data Position for Bit5	T_{RIP5}	-	5T/7	-	ns
Input Data Position for Bit6	T_{RIP6}	-	6T/7	-	ns
CLKOUT Period	T_{RCOP}	-	T	-	ns
CLKOUT High Time	T_{RCOH}	-	T/2	-	ns
CLKOUT Low Time	T_{RCOL}	-	T/2	-	ns

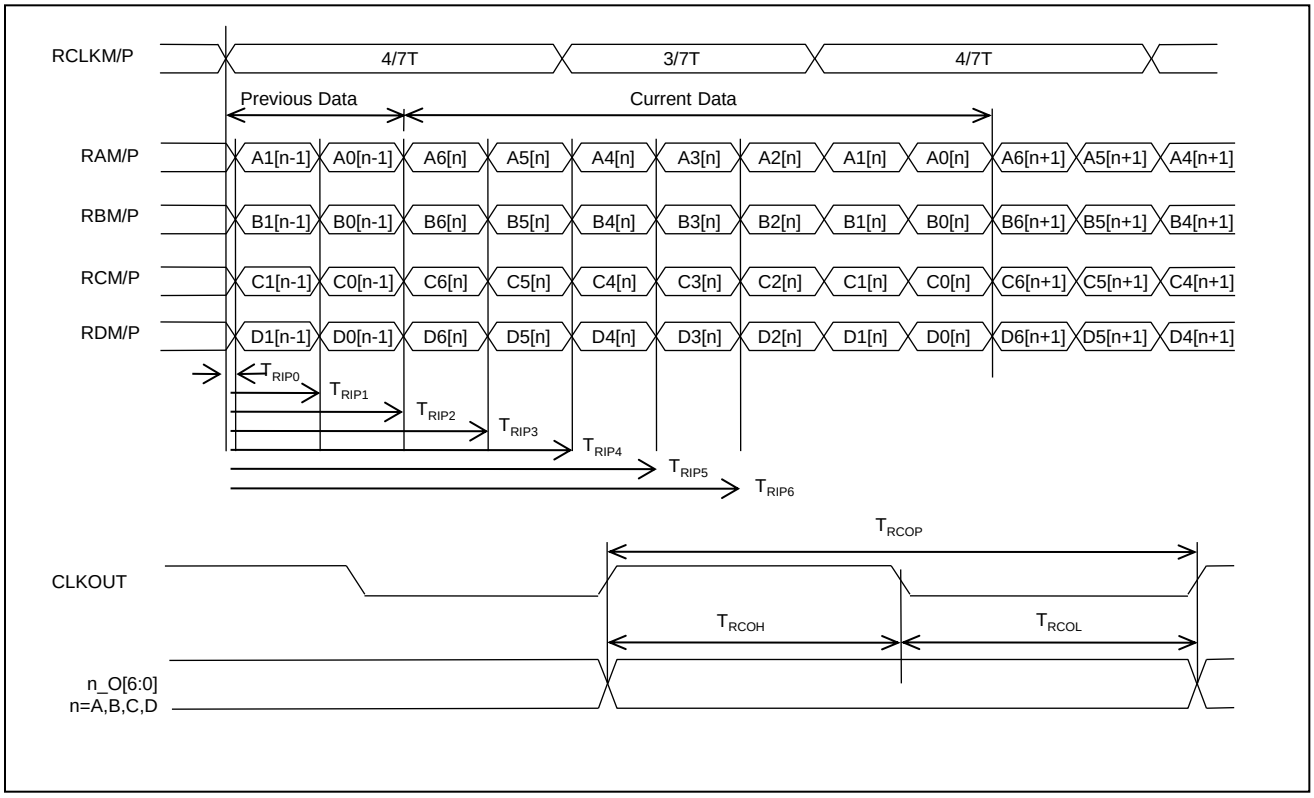

5-4-2. AC Specification

Parameter	Symbol	Min	Max	Unit	Notes
LVDS Clock to Data Skew Margin	t_{SKEW}	-400	+400	ps	45MHz > F_{clk} ≥ 25MHz
Maximum deviation of input clock frequency during SSC	F_{DEW}	-	±3	%	-
Maximum modulation frequency of input clock during SSC	F_{MOD}	-	200	KHz	-

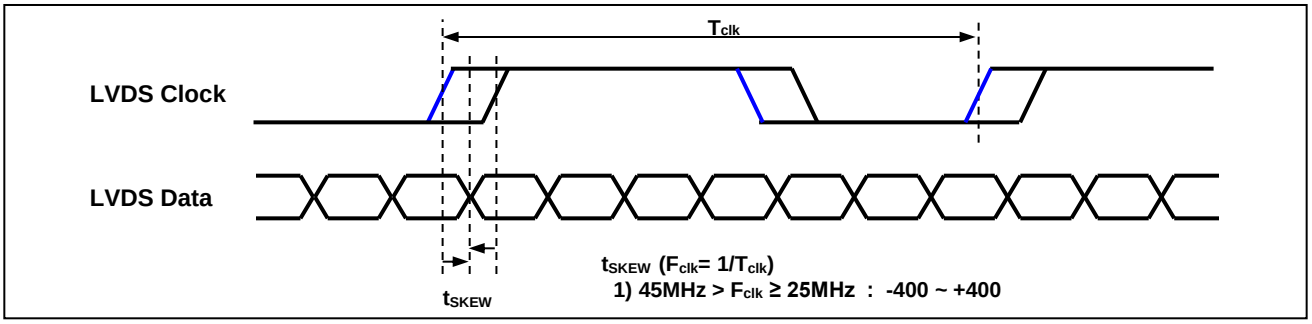

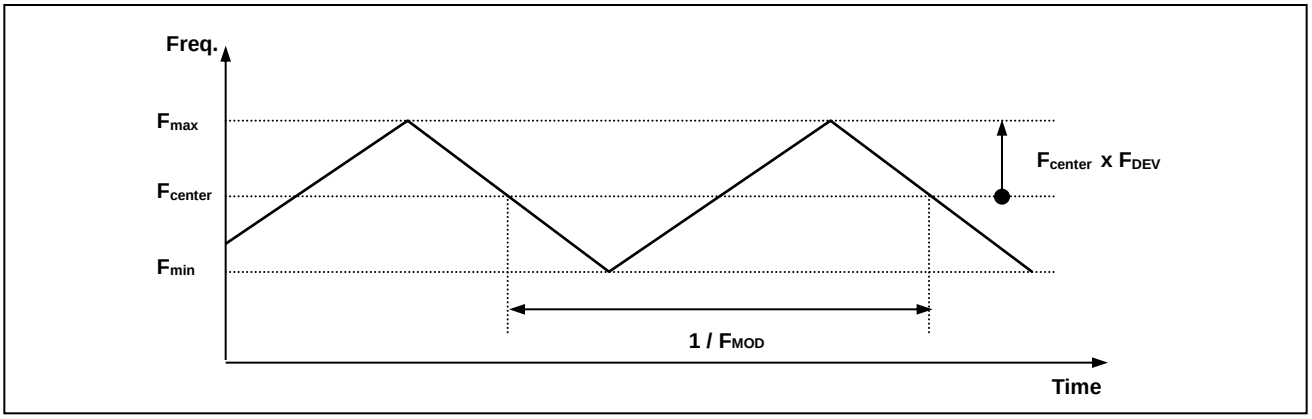

< Spread Spectrum >

5-5. Color Data Reference

The brightness of each primary color(red, green, blue) is based on the 6bit gray scale data input for the color. The higher binary input, the brighter the color. Table 6 provides a reference for color versus data input.

Table 6. COLOR DATA REFERENCE

Color		Input Color Data																							
		RED								GREEN								BLUE							
		MSB							LSB	MSB							LSB	MSB							LSB
		R7	R6	R5	R4	R3	R2	R1	R0	G7	G6	G5	G4	G3	G2	G1	G0	B7	B6	B5	B4	B3	B2	B1	B0
Basic Color	Black	0	0	0	0	0	0	0	0	0	0	0	0	0	0	0	0	0	0	0	0	0	0	0	0
	Red	1	1	1	1	1	1	1	1	0	0	0	0	0	0	0	0	0	0	0	0	0	0	0	0
	Green	0	0	0	0	0	0	0	0	1	1	1	1	1	1	1	1	0	0	0	0	0	0	0	0
	Blue	0	0	0	0	0	0	0	0	0	0	0	0	0	0	0	0	1	1	1	1	1	1	1	1
	Cyan	0	0	0	0	0	0	0	0	1	1	1	1	1	1	1	1	1	1	1	1	1	1	1	1
	Magenta	1	1	1	1	1	1	1	1	0	0	0	0	0	0	0	0	1	1	1	1	1	1	1	1
	Yellow	1	1	1	1	1	1	1	1	1	1	1	1	1	1	1	1	0	0	0	0	0	0	0	0
	White	1	1	1	1	1	1	1	1	1	1	1	1	1	1	1	1	1	1	1	1	1	1	1	1
RED	RED (000)	0	0	0	0	0	0	0	0	0	0	0	0	0	0	0	0	0	0	0	0	0	0	0	0
	RED (001)	0	0	0	0	0	0	0	1	0	0	0	0	0	0	0	0	0	0	0	0	0	0	0	0
	...	...								...								...							
	RED (255)	1	1	1	1	1	1	1	0	0	0	0	0	0	0	0	0	0	0	0	0	0	0	0	0
	RED (255)	1	1	1	1	1	1	1	1	0	0	0	0	0	0	0	0	0	0	0	0	0	0	0	0
GREEN	GREEN (000)	0	0	0	0	0	0	0	0	0	0	0	0	0	0	0	0	0	0	0	0	0	0	0	0
	GREEN (001)	0	0	0	0	0	0	0	0	0	0	0	0	0	0	0	1	0	0	0	0	0	0	0	0
	...	...								...								...							
	GREEN (255)	0	0	0	0	0	0	0	0	1	1	1	1	1	1	1	0	0	0	0	0	0	0	0	0
	GREEN (255)	0	0	0	0	0	0	0	0	1	1	1	1	1	1	1	1	0	0	0	0	0	0	0	0
BLUE	BLUE (000)	0	0	0	0	0	0	0	0	0	0	0	0	0	0	0	0	0	0	0	0	0	0	0	0
	BLUE (001)	0	0	0	0	0	0	0	0	0	0	0	0	0	0	0	0	0	0	0	0	0	0	0	1
	...	...								...								...							
	BLUE (254)	0	0	0	0	0	0	0	0	0	0	0	0	0	0	0	0	1	1	1	1	1	1	1	0
	BLUE (255)	0	0	0	0	0	0	0	0	0	0	0	0	0	0	0	0	1	1	1	1	1	1	1	1

5-6. Power Sequence

For LCD's normal operation, it is recommended to keep below power supply sequence.

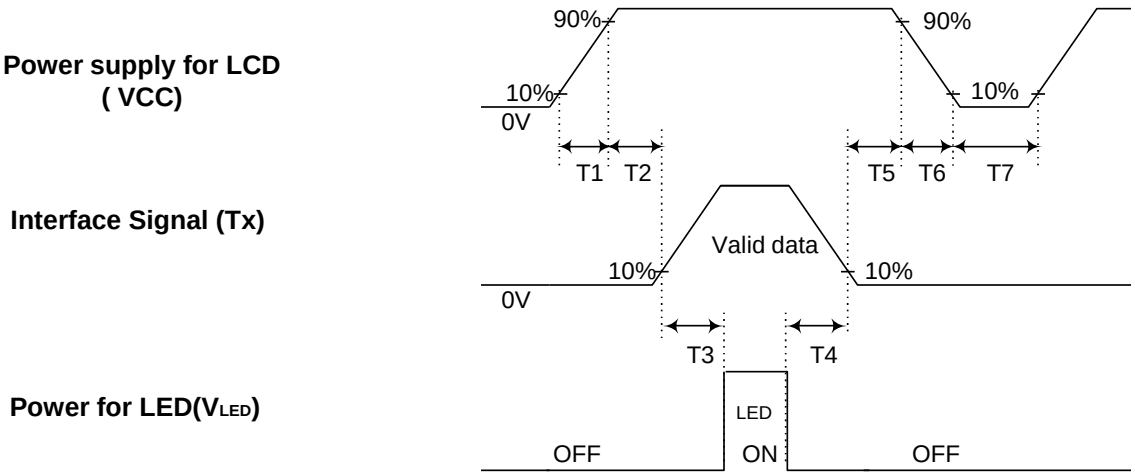

Table 9. POWER SEQUENCE TABLE

Parameter	Value			Units
	Min.	Typ.	Max.	
T_1	-	-	10	(ms)
T_2	50	-	-	(ms)
T_3	200	-	-	(ms)
T_4	200	-	-	(ms)
T_5	0	-	50	(ms)
T_6	-	-	10	(ms)
T_7	500	-	-	(ms)

Note)
1. Please avoid floating state of interface signal at invalid period.
2. When the interface signal is invalid, be sure to pull down the power supply for LCD VCC to 0V.
3. Lamp power must be turn on after power supply for LCD and interface signal are valid.

6. Electro-optical Characteristics

Electro-optical characteristics are determined after the unit has been 'ON' and stable in a dark environment at 25±2°C. The values are specified at an approximate distance 50cm from the LCD surface at a viewing angle of and equal to 0°. Measured value at the center point of LCD panel after more than 15 minutes while backlight turning on.
It is presented additional information concerning the measurement equipment and method in FIG. 1.

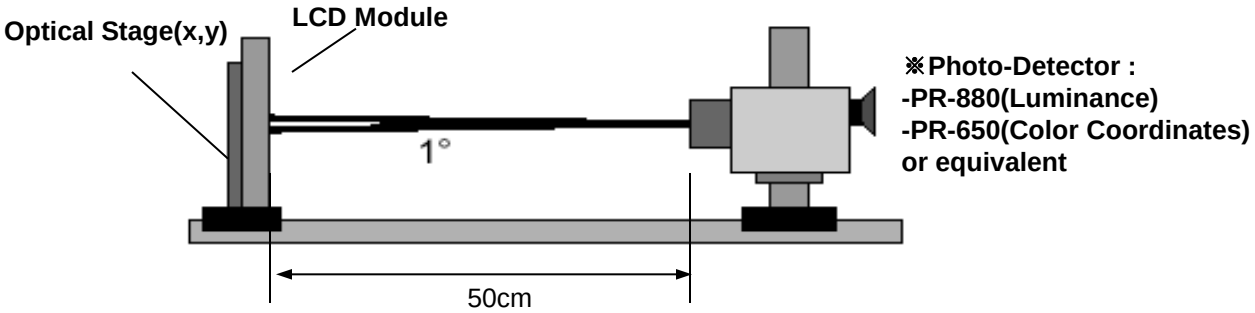

FIG. 3 Electro-optical Characteristic Measurement Equipment and Method

Table 8. ELECTRO-OPTICAL CHARACTERISTICS

Ta=25±2˚C, VCC=3.3V, fv=60Hz

Parameter		Symbol	Value			Unit	Note
			Min	Typ	Max		
Contrast Ratio		CR	560	800	-		1
Surface Luminance, white		L_{WH}	360	450	-	cd/m^2	2
Luminance Variation		δ_{WHITE} 9P	80	-	-	%	3
Response Time	Rise Time	Tr_R	-	15	18	ms	4
	Decay Time	Tr_D	-	10	12	ms	
Color Coordinates [CIE1931]	RED	Rx	Typ -0.03	0.631	Typ +0.03		6
		Ry		0.348			
	GREEN	Gx		0.328			
		Gy		0.606			
	BLUE	Bx		0.146			
		By		0.100			
	WHITE	Wx		0.305			
		Wy		0.335			
Color Gamut			-	60	-	%	
Viewing Angle (CR>10)	x axis, right(ϕ=0°)	θr	89	-	-	degree	5
	x axis, left (ϕ=180°)	θl	89	-	-		
	y axis, up (ϕ=90°)	θu	89	-	-		
	y axis, down (ϕ=270°)	θd	89	-	-		
Gray scale				2.2			7

Note 1. Contrast Ratio(CR) is defined mathematically as :

$$\text{Contrast Ratio} = \frac{\text{Surface Luminance with all white pixels}}{\text{Surface Luminance with all black pixels}}$$

It is measured at center 1-point.

2. Surface luminance are determined after the unit has been 'ON' and More than 15 Minute after lighting the backlight in a dark environment at 25±2°C. Surface luminance is the luminance value at center 1-point across the LCD surface 50cm from the surface with all pixels displaying white. For more information see the FIG. 4.

3. The Luminance Uniformity (δ_{WHITE}) is determined by measuring LN at each test position 1 through 9. The Luminance Uniformity (δ_{WHITE}) is defined as follows ;

$$\text{Panel total variation } (\delta_{WHITE}) = \frac{\text{Minimum}(L1, L2, L3, L4 \ldots L9)}{\text{Maximum}(L1, L2, L3, L4 \ldots L9)} \times 100\%$$

For more information see the FIG. 4.

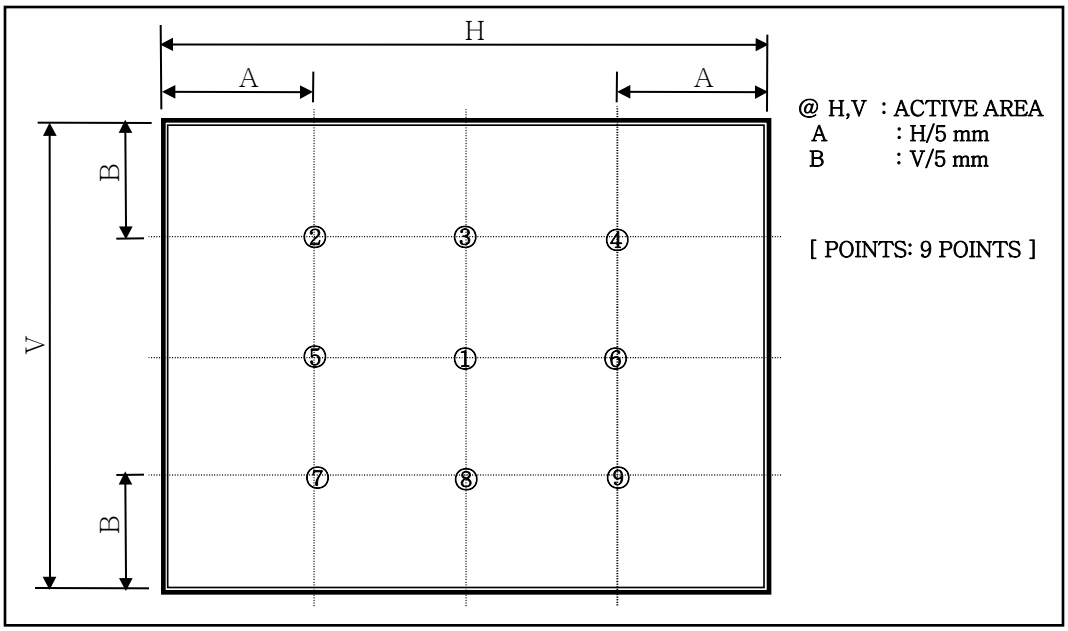

Note 4. Response time is obtained by measuring the transition time of photo detector output, when input signals are applied to make center point “black” and “white”. For more information, see the FIG. 5.

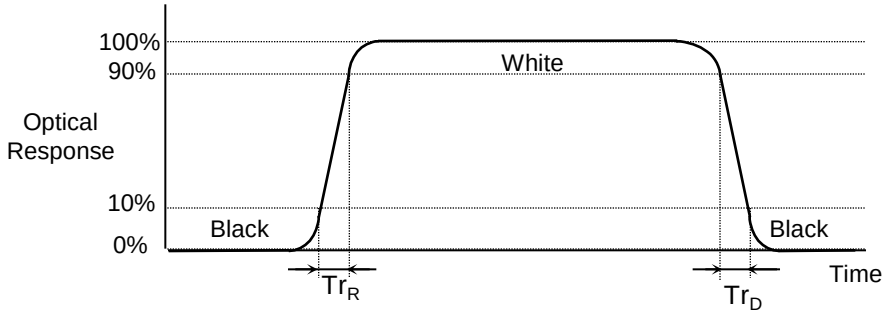

FIG. 5 Response Time

5. Viewing angle is the angle at which the contrast ratio is greater than 10. The angles are determined for the horizontal or x axis and the vertical or y axis with respect to the z axis which is normal to the LCD module surface. For more information, see the FIG. 6.

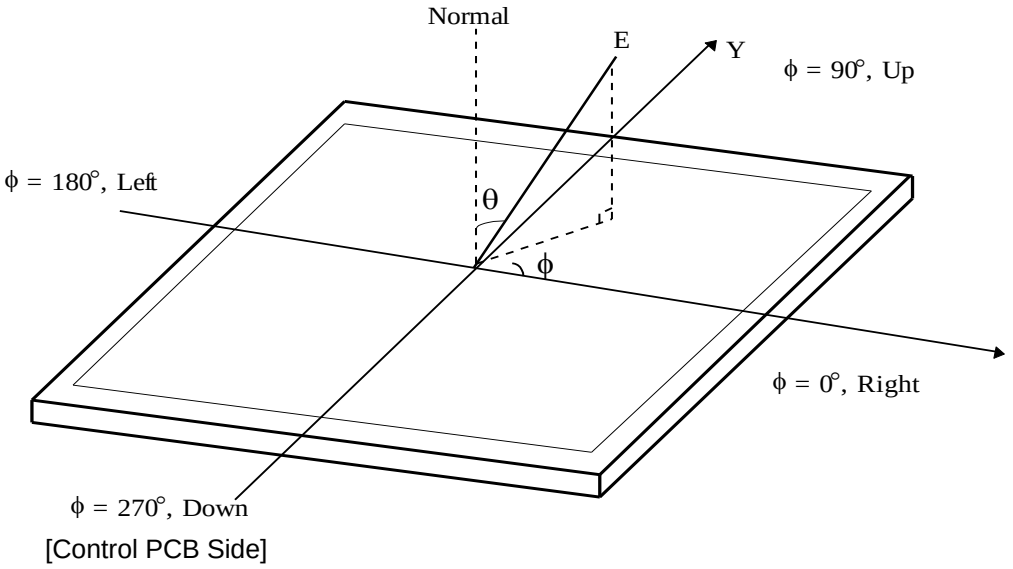

FIG. 6 Viewing Angle

6. Please see the Appendix V for more information about Color Coordinator

Note 7. Gray scale Specification

Gray Level	Luminance [%] (Typ)
L0	0.09
L15	0.28
L31	0.97
L47	2.31
L63	4.41
L79	7.03
L95	9.70
L111	13.50
L127	18.0
L143	22.8
L159	28.3
L175	34.6
L191	41.9
L207	50.4
L223	64.9
L239	85.0
L255	100

7. Mechanical Characteristics

The contents provide general mechanical characteristics for this module. In addition the figures in the next page are detailed mechanical drawing of the LCD.

Table 9. MECHANICAL CHARACTERISTICS

Parameter	Value	
Outline Dimension	Horizontal	170 ± 0.3 mm
	Vertical	106.3 ± 0.3 mm
	Depth	10 ± 0.7 mm
Active Display Area	Horizontal	152.4 mm
	Vertical	91.44 mm
Weight	220.0g (Max.)	

<FRONT VIEW>

Note. Unit:[mm], General tolerance: ± 0.3mm

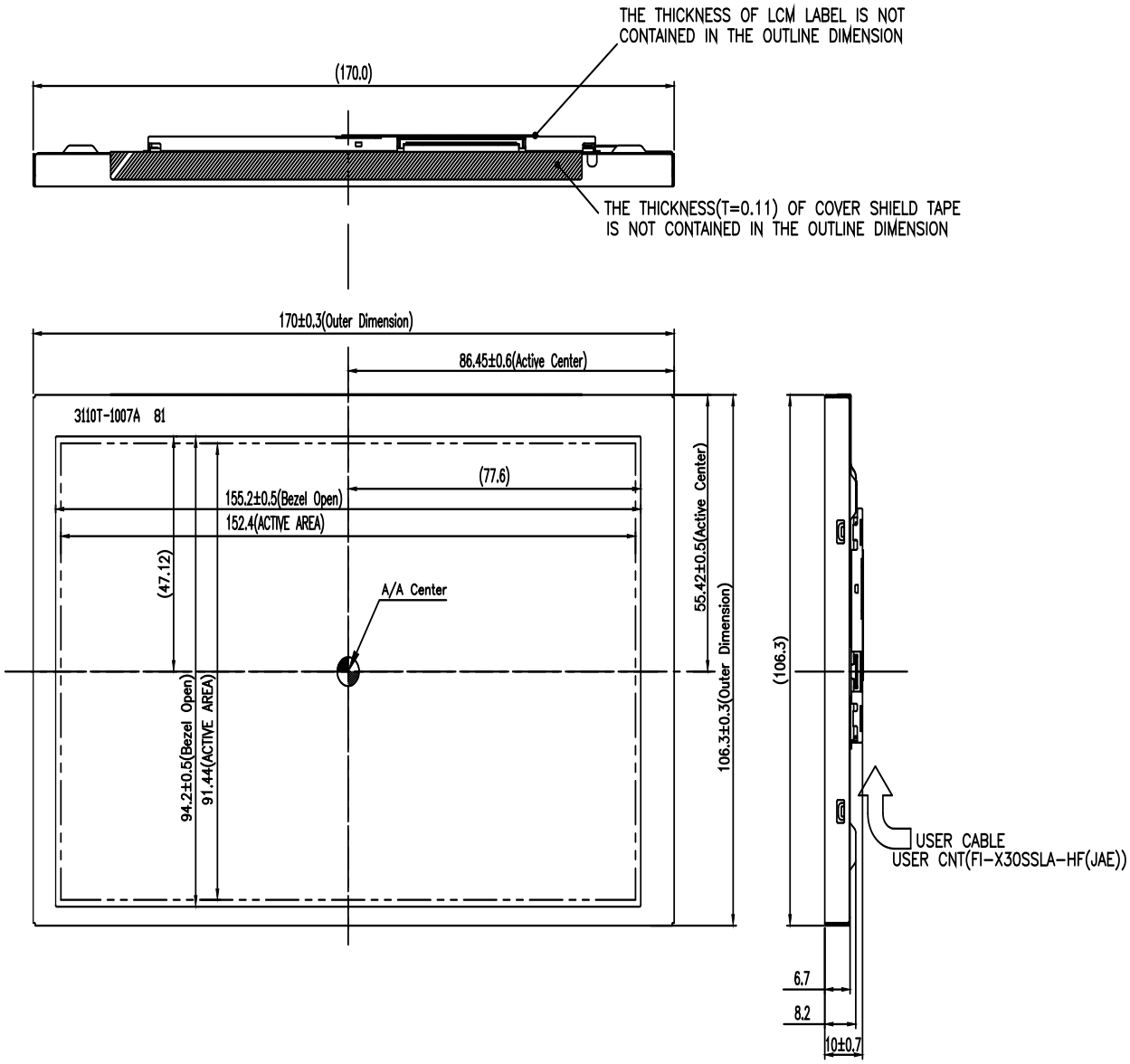

<REAR VIEW>

Note. Unit:[mm], General tolerance: ± 0.3mm

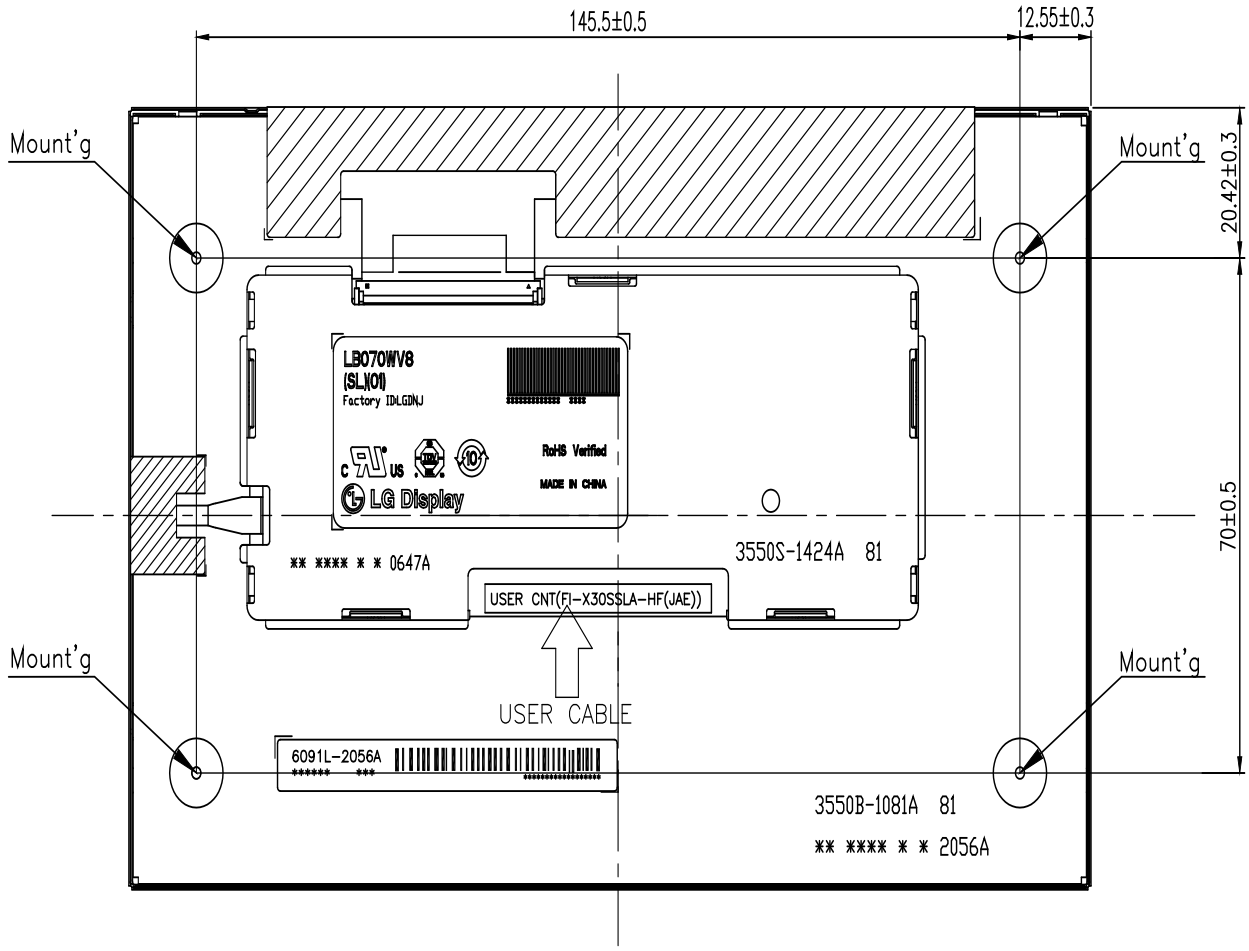

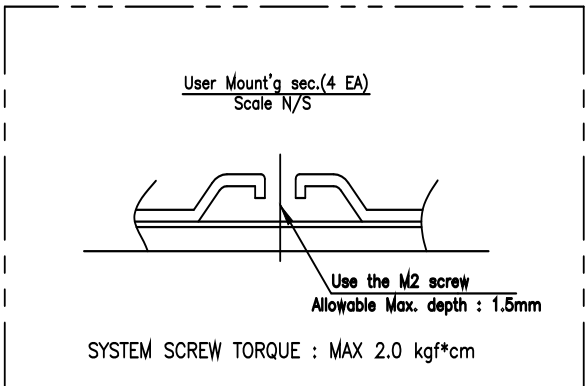

8. Reliability

Table 10. ENVIRONMENT TEST CONDITION

No	Test Item	Condition	Note
1	High Temperature Storage Test	Ta=85℃ 240h	1
2	Low Temperature Storage Test	Ta=-30℃ 240h	
3	High Temperature Operation Test	Ta=80℃ 240h	
4	Low Temperature Operation Test	Ta=-30℃ 240h	
5	High Humidity Operation Test	Ta=60℃/90%RH 240h	
6	Shock Test (non-operating)	Half sine wave, 100G, 11ms, 1 times shock of each six faces (±X / ±Y / ±Z)	-
7	Vibration Test (non-operating)	Random, 10 ~ 300Hz, 1Grms,3 axis, 30min/axis	-

Note 1. Result Evaluation Criteria:
TFT-LCD panels should take place at room temperature for 24 hours after the reliability tests finish.
In the standard condition, there should be no particular problems that may affect the display function.

9. International Standards

9-1. Safety

a) UL 60950-1, Underwriters Laboratories Inc.
Information Technology Equipment - Safety - Part 1 : General Requirements
b) CAN/CSA C22.2 No.60950-1-07, Canadian Standards Association.
Information Technology Equipment - Safety - Part 1 : General Requirements.
c) EN 60950-1, European Committee for Electrotechnical Standardization (CENELEC).
Information Technology Equipment - Safety - Part 1 : General Requirements.

9-2. Environment

a) RoHS, Directive 2011/65/EU of the European Parliament and of the council of 8 June 2011

10. Packing

10-1. Designation of Lot Mark

a) Lot Mark

A	B	C	D	E	F	G	H	I	J	K	L	M

A,B,C : SIZE(INCH)
E : MONTH
D : YEAR
F ~ M : SERIAL NO.

Note

1. YEAR

Year	2011	2012	2013	2014	2015	2016	2017	2018	2019	2020
Mark	A	B	C	D	E	F	G	H	J	K

2. MONTH

Month	Jan	Feb	Mar	Apr	May	Jun	Jul	Aug	Sep	Oct	Nov	Dec
Mark	1	2	3	4	5	6	7	8	9	A	B	C

b) Location of Lot Mark

Serial No. is printed on the label. The label is attached to the backside of the LCD module.
This is subject to change without prior notice.

10-2. Packing Form

a) Package quantity in one box : 54 pcs
b) Box Size : 478 mm × 365 mm × 244 mm
c) Pallet Pattern : 3 x 2 x 4
d) Quantity in one pallet : 1,296 pcs

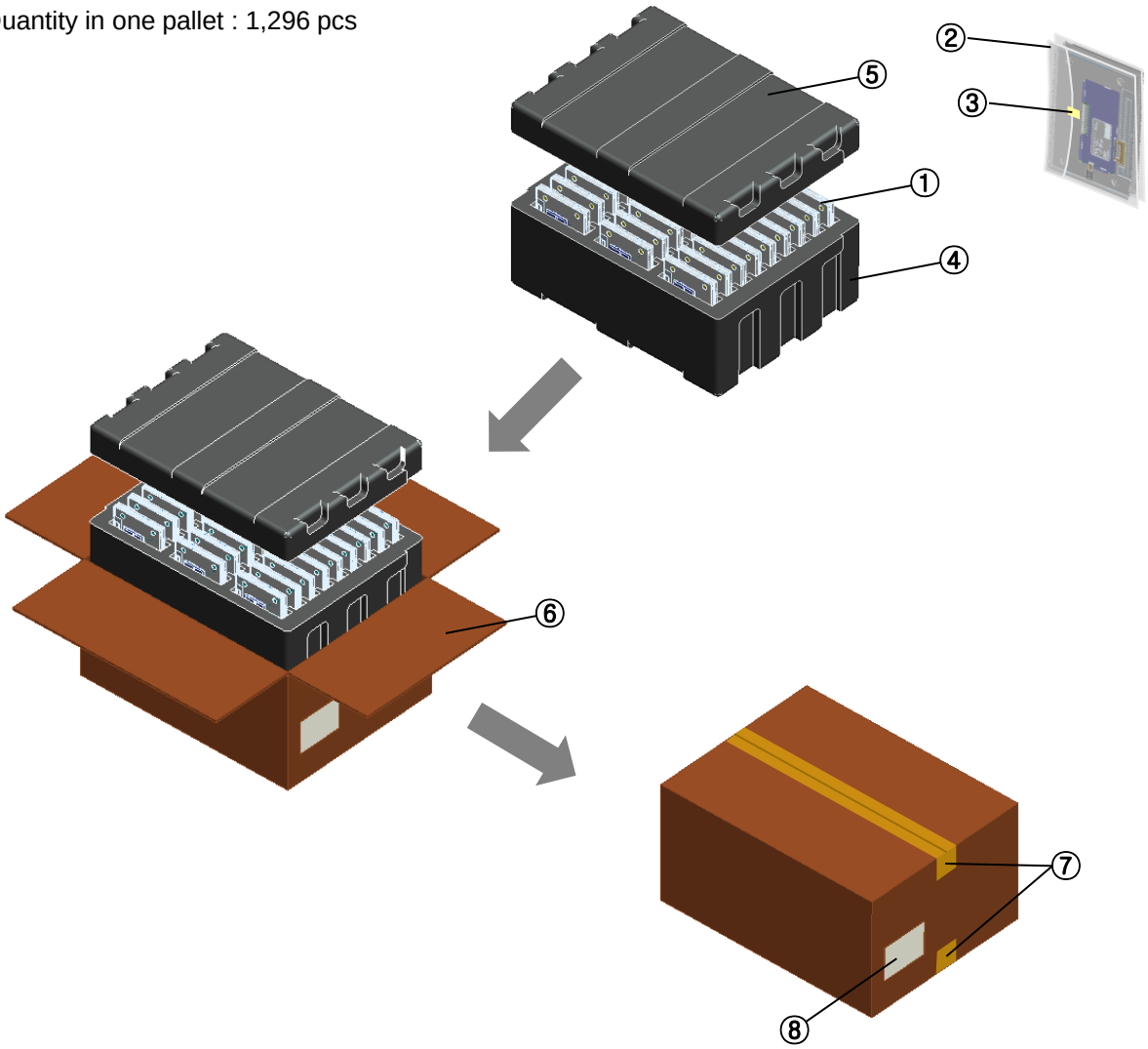

NO.	Description	Material
1	Module	54pcs/1 Box
2	Bag	PE, 187X144
3	Tape	Yellow, 40*20
4	Packing, Bottom	EPS
5	Packing, Top	EPS
6	Carton Box	PAPER SW
7	Tape	OPP 70MMx300m
8	Label	YUPO Paper 100x70

11. PRECAUTIONS

Please pay attention to the following when you use this TFT LCD module.

11-1. MOUNTING PRECAUTIONS

(1) You must mount a module using specified mounting structure. (Details refer to the drawings)
(2) You should consider the mounting structure so that uneven force(ex. Twisted stress) is not applied to the module.
And the case on which a module is mounted should have sufficient strength so that external force is not transmitted directly to the module.
(3) Please attach a transparent protective plate to the surface in order to protect the polarizer.
Transparent protective plate should have sufficient strength in order to the resist external force.
(4) You should adopt radiation structure to satisfy the temperature specification.
(5) Acetic acid type and chlorine type materials for the cover case are not desirable because the former generates corrosive gas of attacking the polarizer at high temperature and the latter causes circuit break by electro-chemical reaction.
(6) Do not touch, push or rub the exposed polarizers with glass, tweezers or anything harder than HB pencil lead. And please do not rub with dust clothes with chemical treatment.
Do not touch the surface of polarizer for bare hand or greasy cloth.(Some cosmetics deteriorate the polarizer.)
(7) When the surface becomes dusty, please wipe gently with absorbent cotton or other soft materials like chamois soaks with petroleum benzine. Normal-hexane is recommended for cleaning the adhesives used to attach front / rear polarizers. Do not use acetone, toluene and alcohol because they cause chemical damage to the polarizer.
(8) Wipe off saliva or water drops as soon as possible. Their long time contact with polarizer causes deformations and color fading.
(9) Do not open the case because inside circuits do not have sufficient strength.
(10) The metal case of a module should be contacted to electrical ground of your system.

11-2. OPERATING PRECAUTIONS

(1) The spike noise causes the mis-operation of circuits. It should be lower than following voltage :
V=±200mV(Over and under shoot voltage)
(2) Response time depends on the temperature.(In lower temperature, it becomes longer.)
(3) Brightness depends on the temperature. (In higher temperature, it becomes lower.)
(4) Be careful for condensation at sudden temperature change. Condensation makes damage to polarizer or electrical contacted parts. And after fading condensation, smear or spot will occur.
(5) When fixed patterns are displayed for a long time, remnant image is likely to occur.
(6) Module has high frequency circuits. Sufficient suppression to the electromagnetic interference shall be done by system manufacturers. Grounding and shielding methods may be important to minimize the interference.

11-3. ELECTROSTATIC DISCHARGE CONTROL

Since a module is composed of electronic circuits, it is not strong to electrostatic discharge. Make certain that treatment persons are connected to ground through wrist band etc. And don't touch interface pin directly.

11-4. PRECAUTIONS FOR STRONG LIGHT EXPOSURE

Strong light exposure causes degradation of polarizer and color filter.

11-5. STORAGE

When storing modules as spares for a long time, the following precautions are necessary.

(1) Store them in a dark place. Do not expose the module to sunlight or fluorescent light. Keep the temperature between 5°C and 35°C at normal humidity.

(2) The polarizer surface should not come in contact with any other object.
It is recommended that they be stored in the container in which they were shipped.

11-6. HANDLING PRECAUTIONS FOR PROTECTION FILM

(1) The protection film is attached to the bezel with a small masking tape or a double side tape.
When the protection film is peeled off, static electricity is generated between the film and polarizer.
This should be peeled off slowly and carefully by people who are electrically grounded and with well ion-blown equipment or in such a condition, etc.

(2) When the module with protection film attached is stored for a long time, sometimes there remains a very small amount of glue still on the bezel after the protection film is peeled off.

(3) You can remove the glue easily. When the glue remains on the bezel surface or its vestige is recognized, please wipe them off with absorbent cotton waste or other soft material like chamois soaked with normal-hexane.

11-7. PRECAUTIONS FOR ATTACHING THE TOUCH PANEL PROCESS

(1) When being touch panel laminate, Stems, Scratch, Stain and etc. can be occurred and then the operation should be with care. After being attached touch panel, It is not warranty for quality problems

Our company network supports you worldwide with offices in Germany, Austria, Switzerland, the UK and the USA. For more information please contact:

Headquarters

Germany

FORTEC Elektronik AG
Lechwiesenstr. 9
86899 Landsberg am Lech

Phone: +49 8191 91172-0
E-Mail: sales@fortecag.de
Internet: www.fortecag.de

Fortec Group Members

Austria

FORTEC Elektronik AG
Office Vienna
Nuschinggasse 12
1230 Wien

Phone: +43 1 8673492-0
E-Mail: office@fortec.at
Internet: www.fortec.at

Germany

Distec GmbH
Augsburger Str. 2b
82110 Germering

Phone: +49 89 894363-0
E-Mail: info@distec.de
Internet: www.distec.de

Switzerland

ALTRAC AG
Bahnhofstraße 3
5436 Würenlos

Phone: +41 44 7446111
E-Mail: info@altrac.ch
Internet: www.altrac.ch

United Kingdom

Display Technology Ltd.
Osprey House, 1 Osprey Court
Hichingbrooke Business Park
Huntingdon, Cambridgeshire, PE29 6FN

Phone: +44 1480 411600
E-Mail: info@displaytechnology.co.uk
Internet: www. displaytechnology.co.uk

USA

Apollo Display Technologies, Corp.
87 Raynor Avenue,
Unit 1Ronkonkoma,
NY 11779

Phone: +1 631 5804360
E-Mail: info@apollodisplays.com
Internet: www.apollodisplays.com